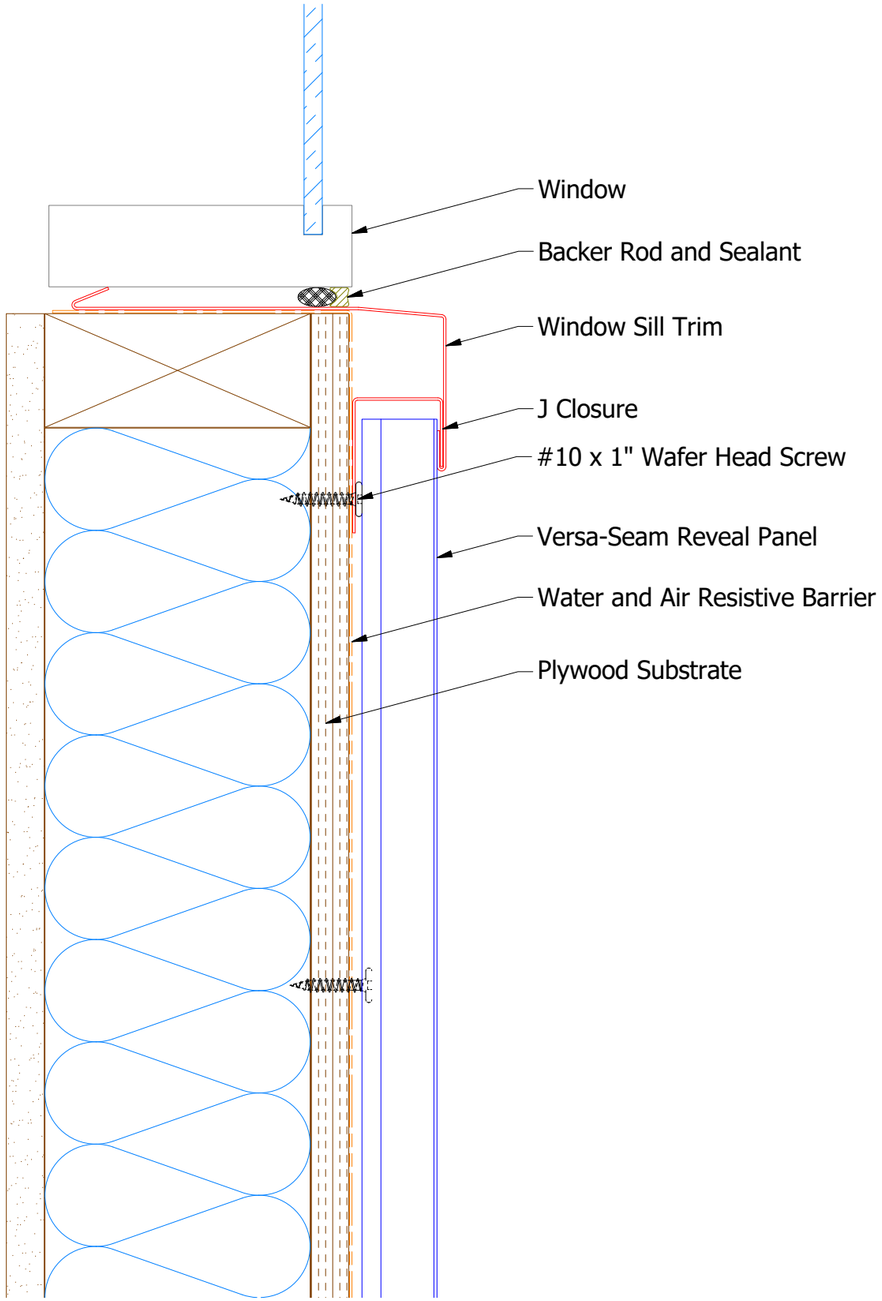

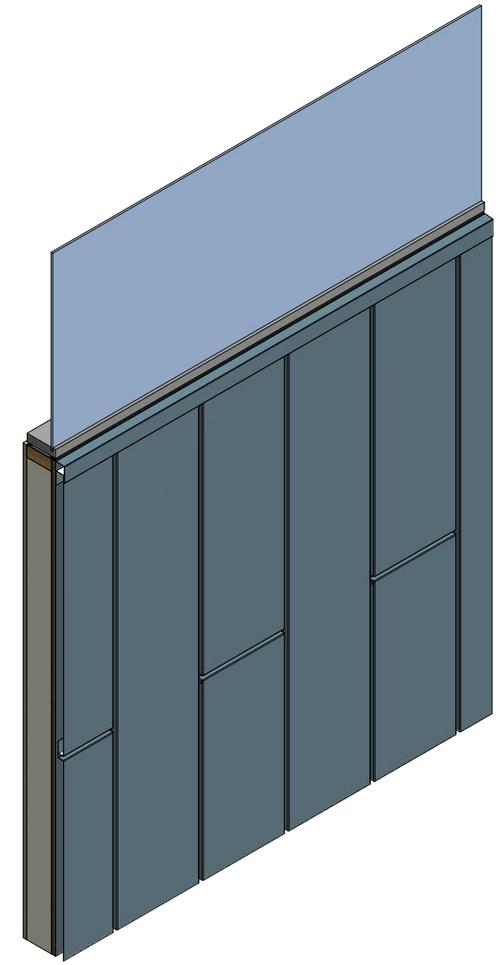

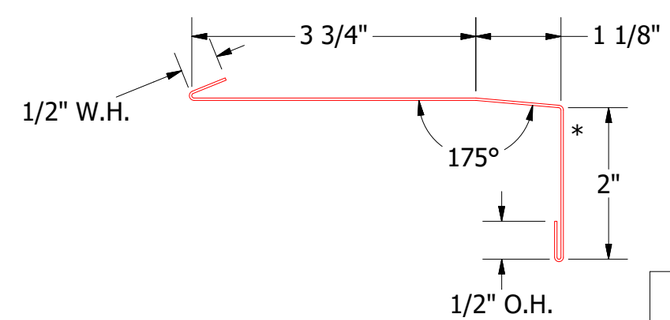

VSA670 - Window Sill Trim

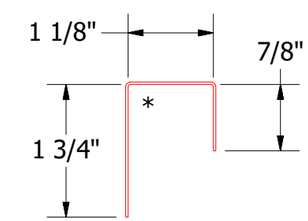

VSA270 - J Closure

Note: * denotes color side.

ATAS INTERNATIONAL, INC
Allentown PA
610-395-8445
Mesa AZ
480-558-7210

REV. NO.	DATE	DESCRIPTION OF REVISION	BY	APP

TITLE Versa-Seam Reveal Solid Window Sill Vertical Detail			
DWG. NO.	DR KRK	DATE 12/6/2022	
	APP	DATE	
MATERIAL	SH. SIZE B	SCALE X:X	