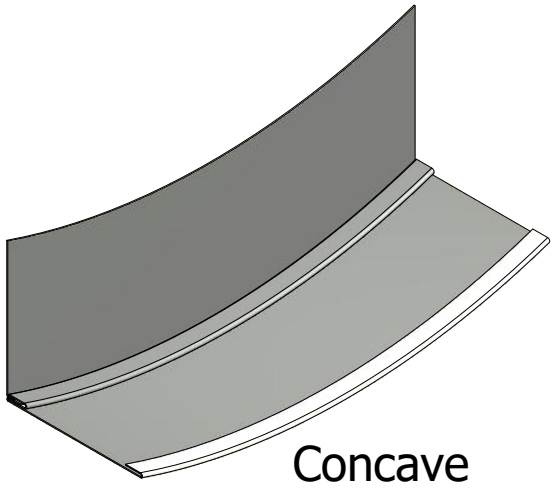


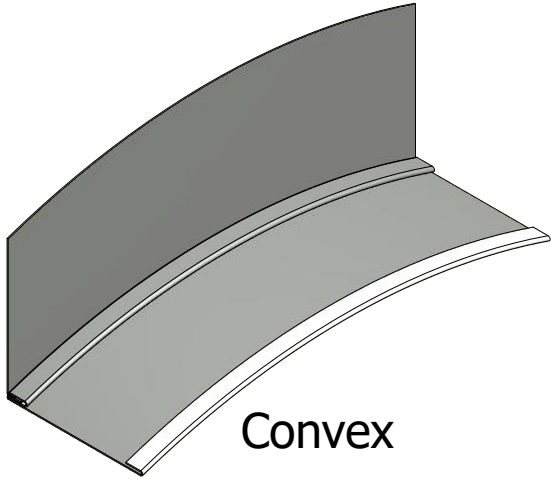


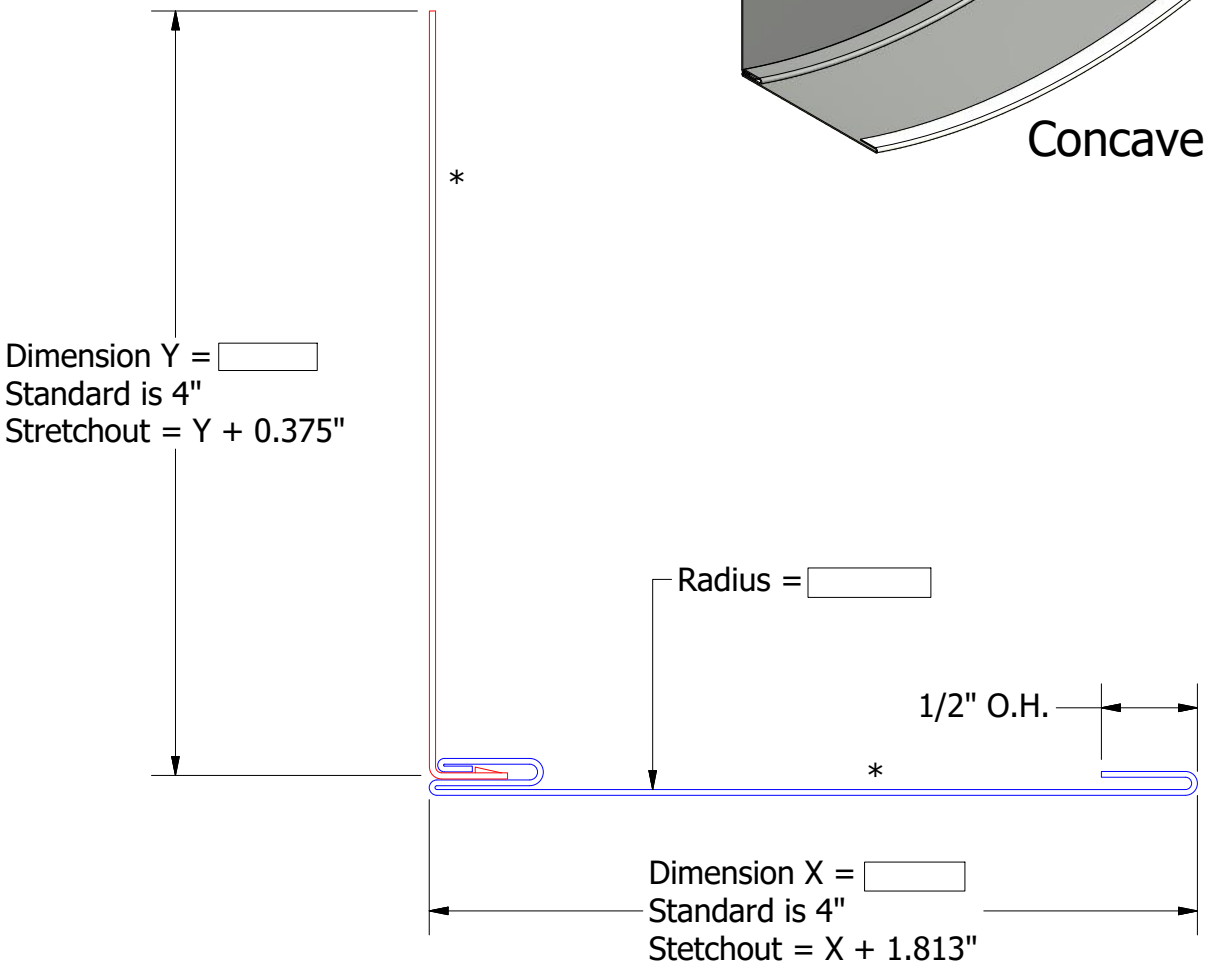


Order #

Concave:

Convex:

Material

Alum

24 ga 55% Al-Zn alloy coated steel with acrylic coating

Finish:

Color:

Trim Length:

Number of Pieces:

ATAS INTERNATIONAL, INC
Allentown PA
610-395-8445
Mesa AZ
480-558-7210

Note: * denotes color side.

Note: Trims shown as Standard, Job Specific Dimensions may alter Final Product Design.

| REV. NO. | DATE | DESCRIPTION OF REVISION | BY | APP |
|---|---|---|---|---|
| 02 | 6/28/2022 | Added Finial Product Design Disclaimer | KRK | |
| 01 | 8/1/2019 | Added Galv + to Material Offering | KRK | |

TITLE: Vaulted Trim Order Sheet - Sidewall Trim

DWG. NO.

MATERIAL

DR: PJR | DATE: 03-20-14

APP | DATE

SH. SIZE: A | SCALE: X:X