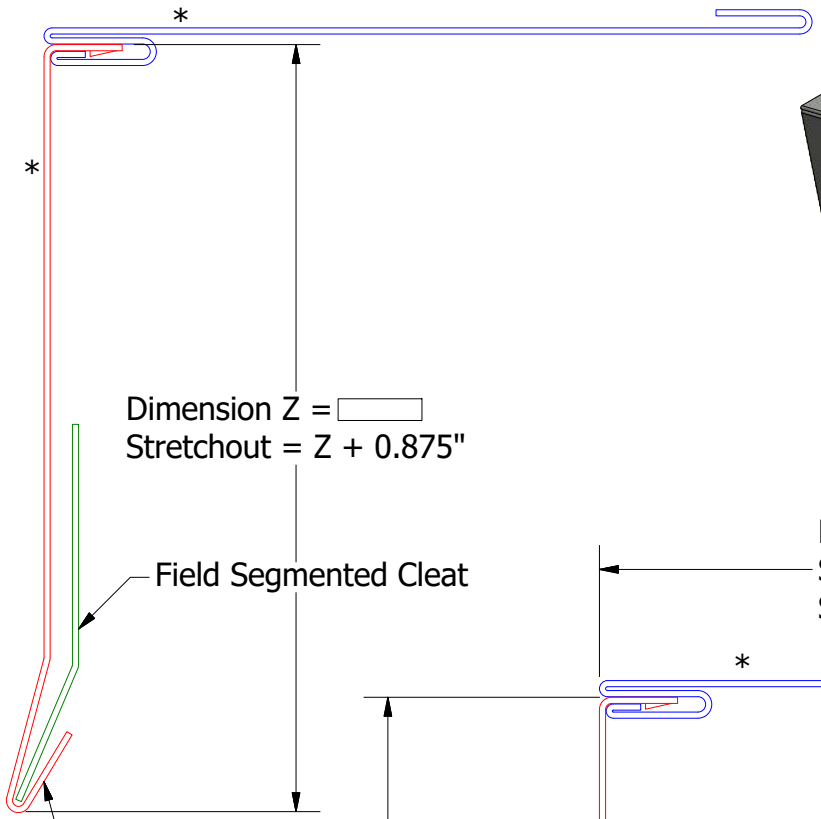

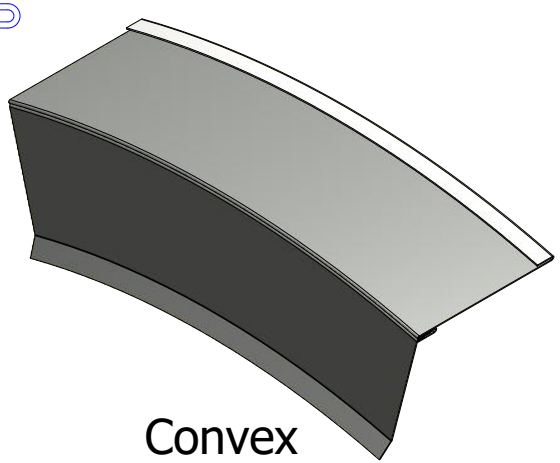

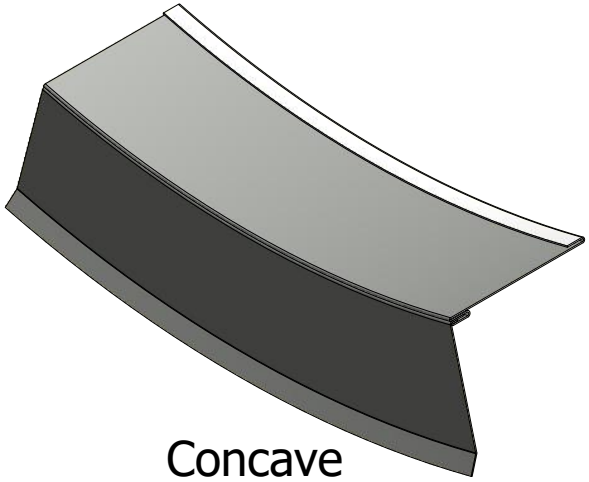

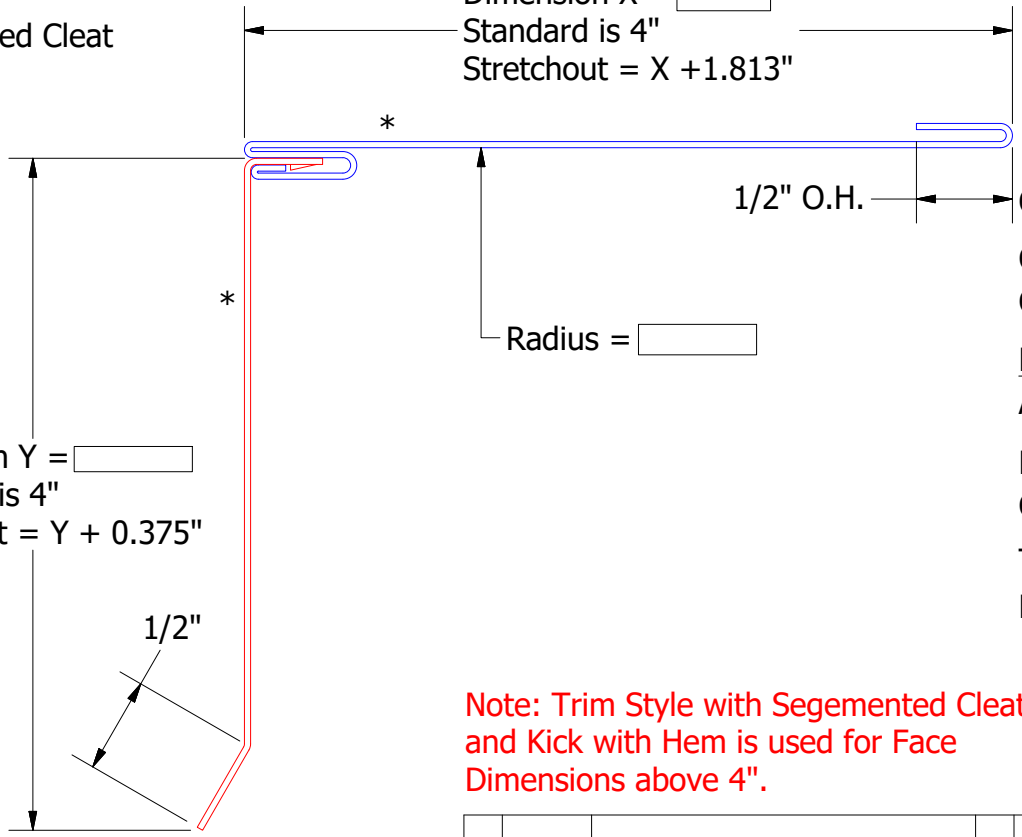

Order #

Concave:

Convex:

Material

Alum

24 ga 55% Al-Zn alloy coated steel with acrylic coating

Finish:

Color:

Trim Length:

Number of Pieces:

Note: Trim Style with Segemented Cleat and Kick with Hem is used for Face Dimensions above 4".

Note: * denotes color side.

Note: Trims shown as Standard, Job Specific Dimensions may alter Final Product Design.

REV. NO.	DATE	DESCRIPTION OF REVISION	BY	APP
02	6/28/2022	Added Finial Product Design Disclaimer	KRK	
01	7/31/2019	Added Galv + to Material Offering Updated Cleat and Hem Design	KRK	

ATAS INTERNATIONAL, INC
Allentown PA
610-395-8445
Mesa AZ
480-558-7210

TITLE
Vaulted Trim Order Sheet - Gable Trim

DWG. NO.	DR PJR	DATE 03-20-14	
MATERIAL	APP	DATE	
	SH. SIZE A	SCALE X:X	