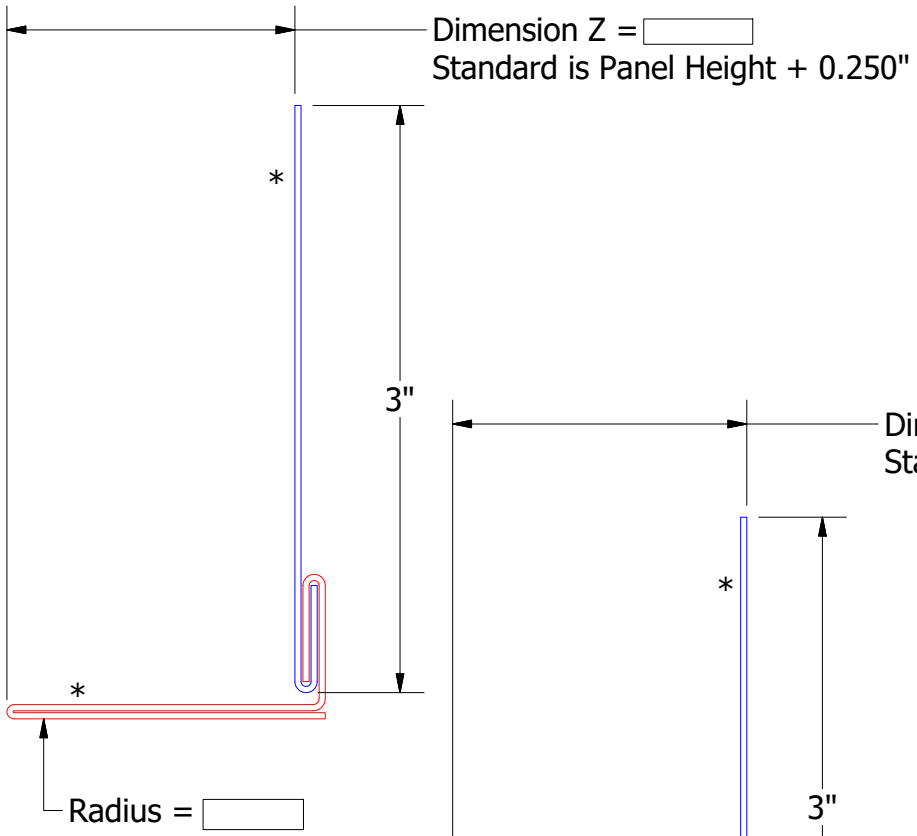

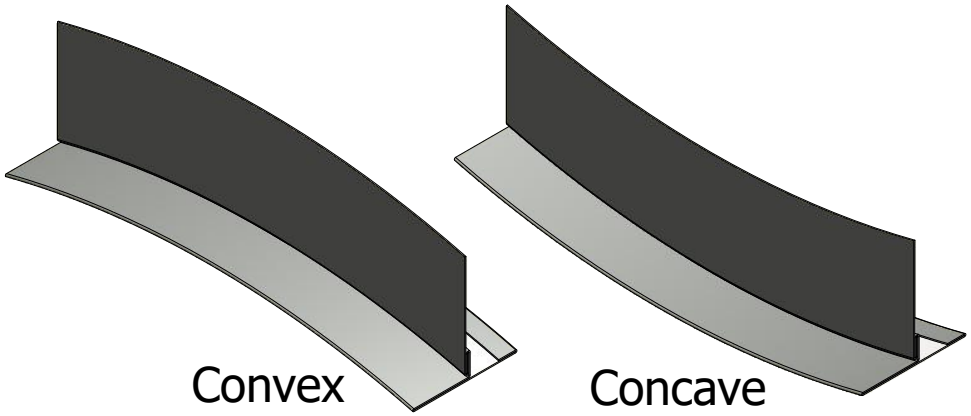

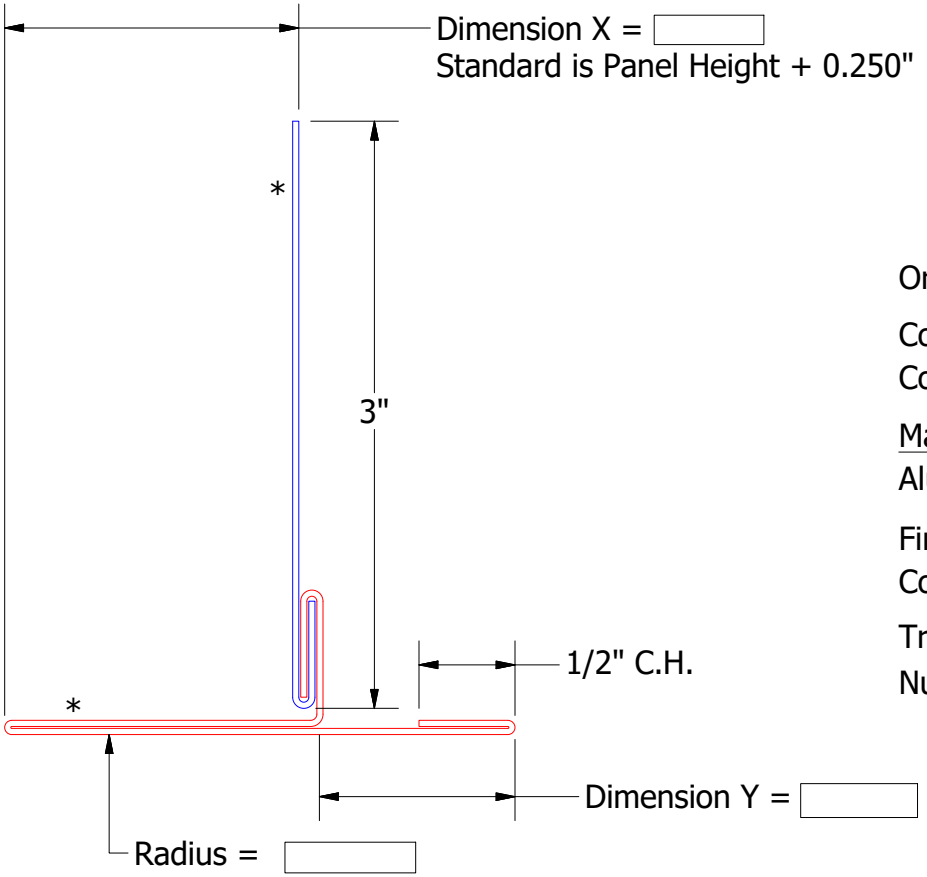

Order # ☐

Concave: ☐

Convex: ☐

Material

Alum ☐ 24 ga 55% Al-Zn alloy coated steel with acrylic coating ☐

Finish: ☐

Color: ☐

Trim Length: ☐

Number of Pieces: ☐

Note: * denotes color side.

Note: Trims shown as Standard, Job Specific Dimensions may alter Final Product Design.

REV. NO.	DATE	DESCRIPTION OF REVISION	BY	APP
02	6/28/2022	Added Finial Product Design Disclaimer	KRK	
01	8/2/2019	Added Galv + to Material Offering Added Standard Base Trim	KRK	

ATAS INTERNATIONAL, INC
Allentown PA
610-395-8445
Mesa AZ
480-558-7210

TITLE Vaulted Trim Order Sheet - Base Trim

DWG. NO.	DR KRK	DATE 11/5/2018	
MATERIAL	APP	DATE	
	SH. SIZE A	SCALE X:X	