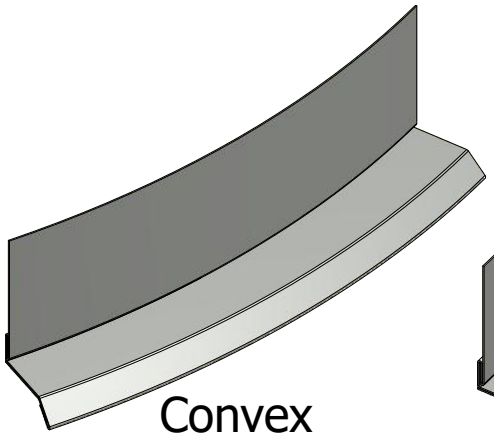

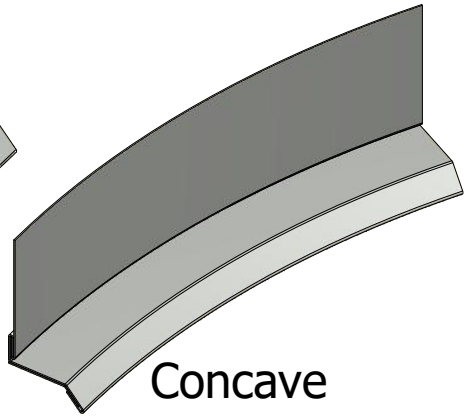

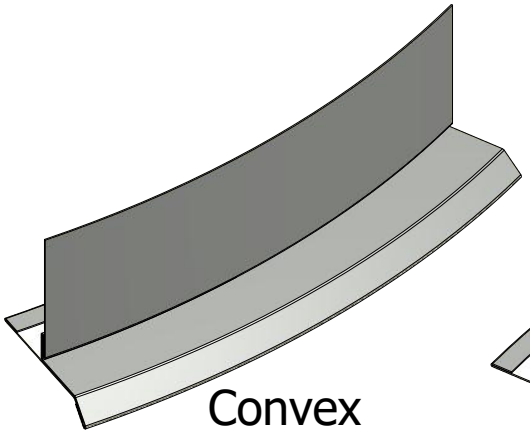

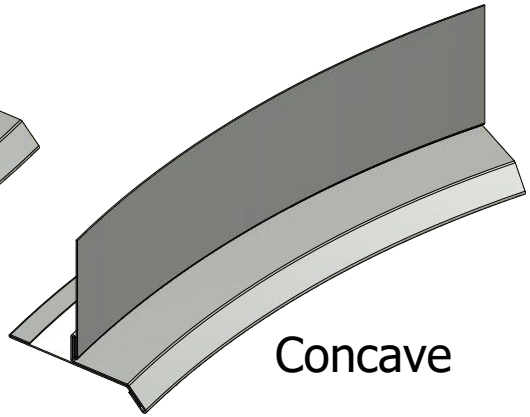

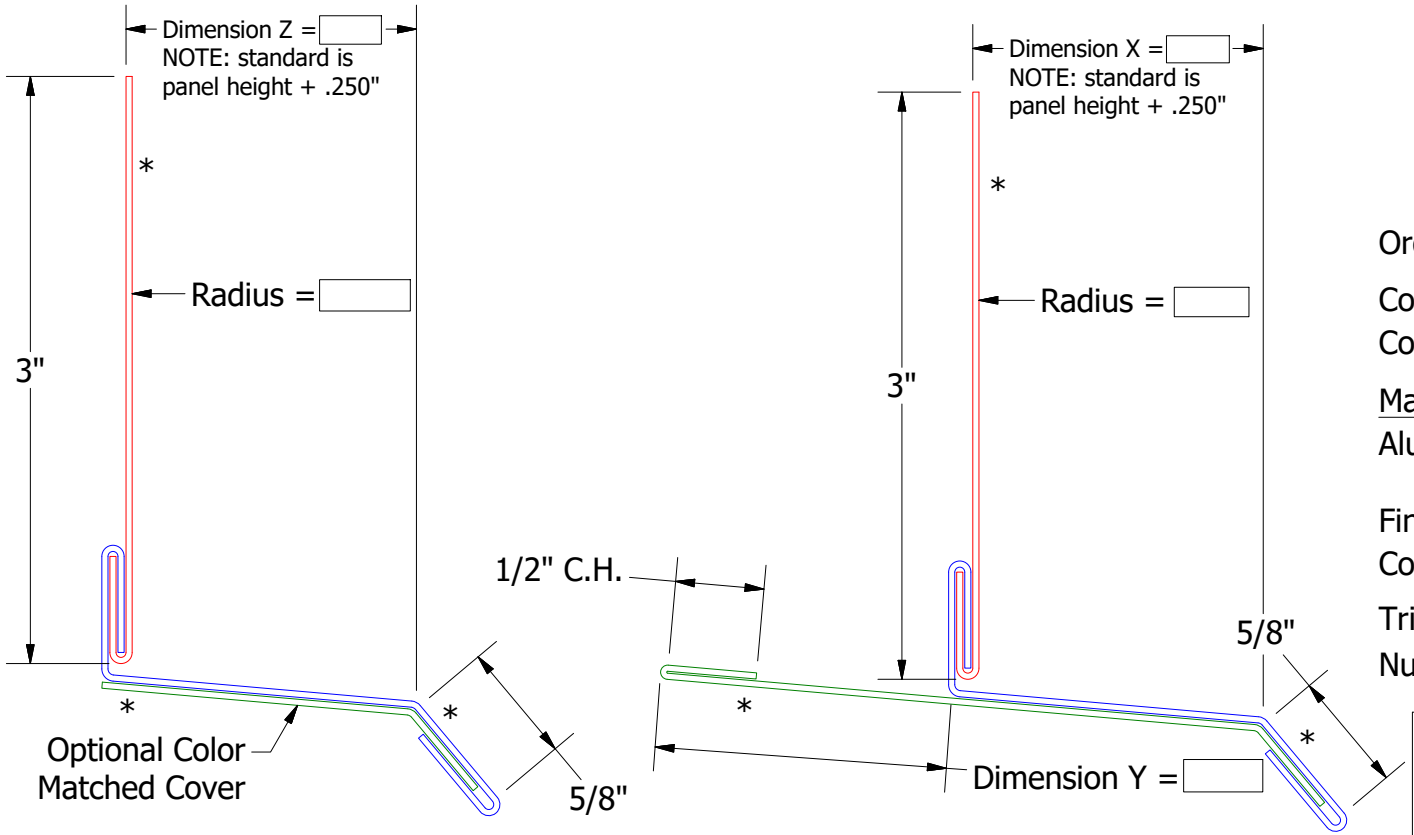

Order # _____

Concave: ☐

Convex: ☐

Material

Alum ☐

24 ga 55% Al-Zn alloy coated steel with acrylic coating ☐

Finish: _____

Color: _____

Trim Length: _____

Number of Pieces: _____

Note: * denotes color side.

Note: Trims shown as Standard, Job Specific Dimensions may alter Final Product Design.

REV. NO.	DATE	DESCRIPTION OF REVISION	BY	APP
02	6/28/2022	Added Finial Product Design Disclaimer	KRK	
01	7/30/2019	Updated Trim Interlocking Style Added Galv + to Material Offering	KRK	

ATAS INTERNATIONAL, INC
Allentown PA
610-395-8445
Mesa AZ
480-558-7210

TITLE: Radius Trim Order Sheet - Base Trim

DWG. NO.	DR PJR	DATE 10-10-16	
MATERIAL	APP	DATE	
	SH. SIZE A	SCALE X:X	

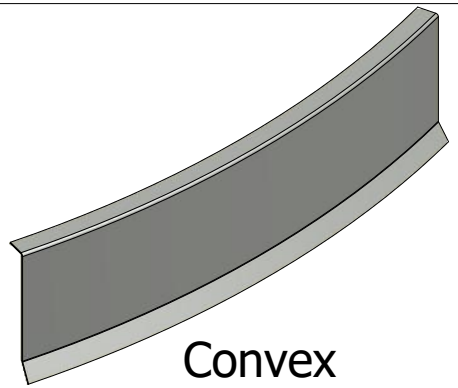

Convex

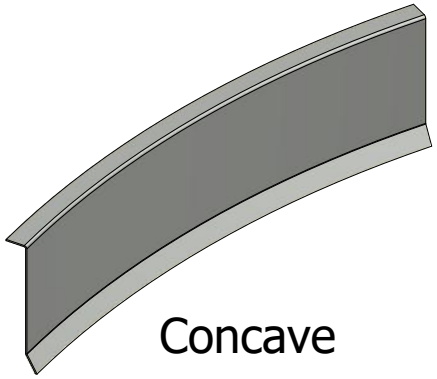

Concave

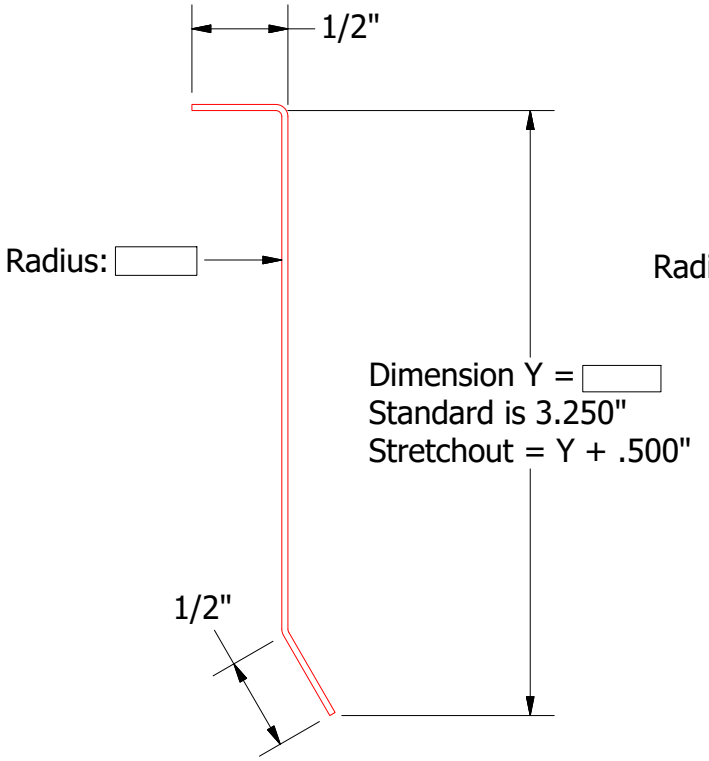

Style A

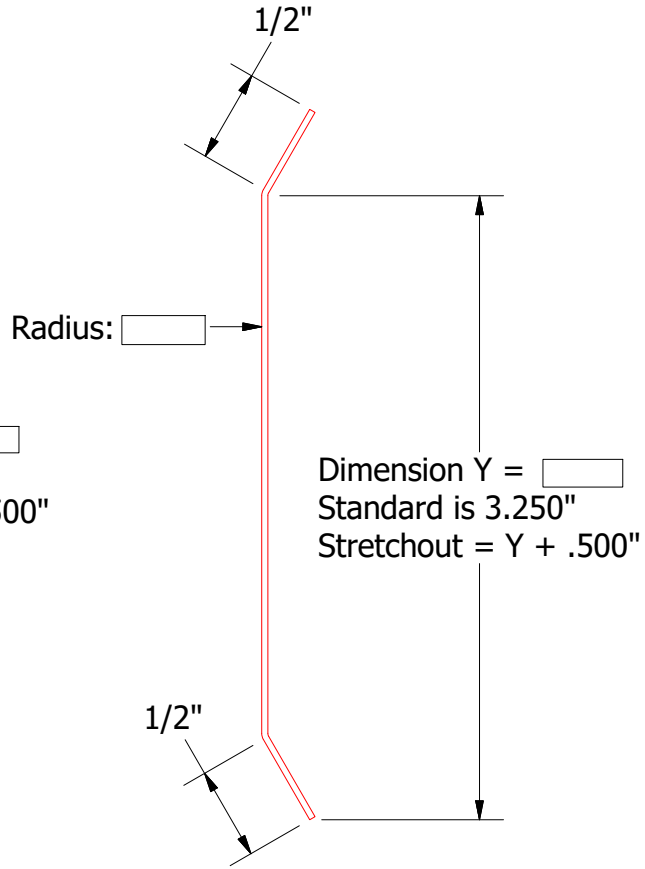

Style B

Order #

Concave:

Convex:

Material

Alum

24 ga 55% Al-Zn alloy coated steel with acrylic coating

Finish:

Color:

Trim Length:

Number of Pieces:

Note: * denotes color side.

Note: Trims shown as Standard, Job Specific Dimensions may alter Final Product Design.

REV. NO.	DATE	DESCRIPTION OF REVISION	BY	APP
01	6/28/2022	Added Finial Product Design Disclaimer	KRK	

ATAS INTERNATIONAL, INC
Allentown PA
610-395-8445
Mesa AZ
480-558-7210

TITLE Radius Trim Order Sheet - Counterflashing

DWG. NO.	DR KRK	DATE 7/30/2019	
MATERIAL	APP	DATE	
	SH. SIZE A	SCALE X:X	

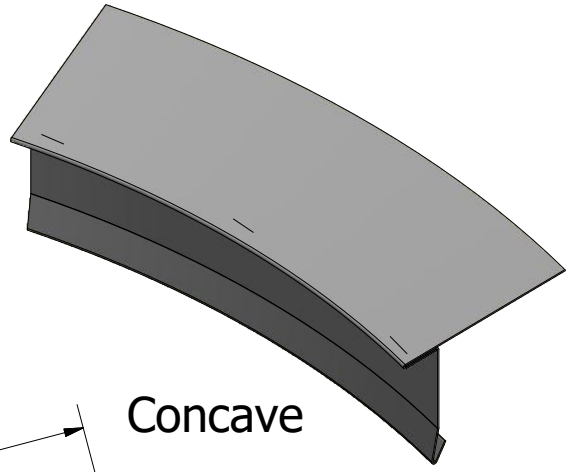

Concave

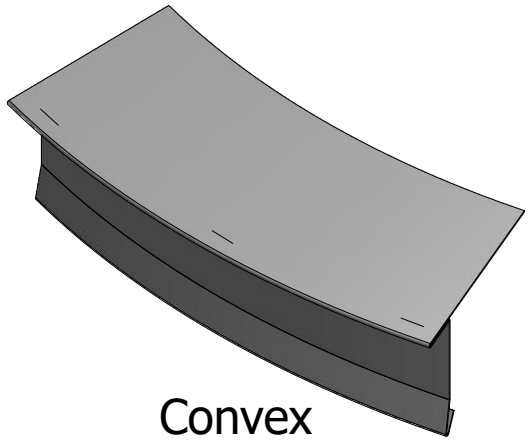

Convex

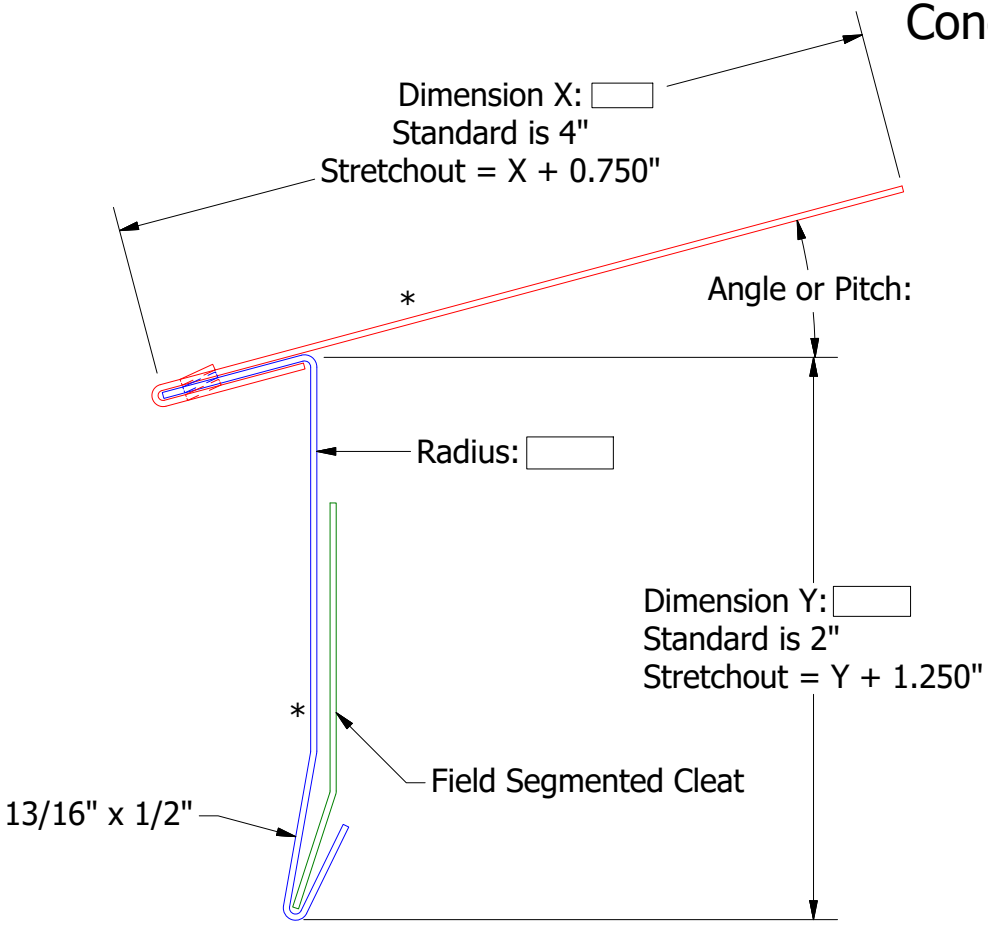

Order #

Concave:

Convex:

Material

Alum

24 ga 55% Al-Zn alloy coated steel with acrylic coating

Finish:

Color:

Trim Length:

Number of Pieces:

Note: * denotes color side.

Note: Trims shown as Standard, Job Specific Dimensions may alter Final Product Design.

REV. NO.	DATE	DESCRIPTION OF REVISION	BY	APP
02	6/28/2022	Added Finial Product Design Disclaimer	KRK	
01	7/30/2019	Updated Trim Interlocking Style Added Galv + to Material Offering	KRK	

ATAS INTERNATIONAL, INC
Allentown PA
610-395-8445
Mesa AZ
480-558-7210

TITLE Radius Trim Order Sheet - Eave Trim

DWG. NO.	DR PJR	DATE 10-10-16	
MATERIAL	APP	DATE	
	SH. SIZE A	SCALE X:X	

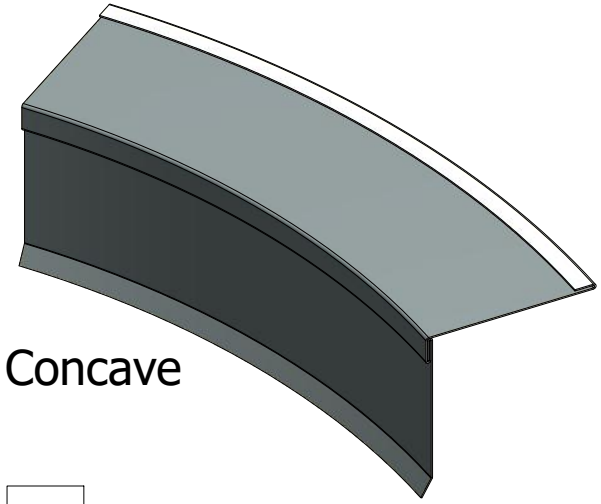

Concave

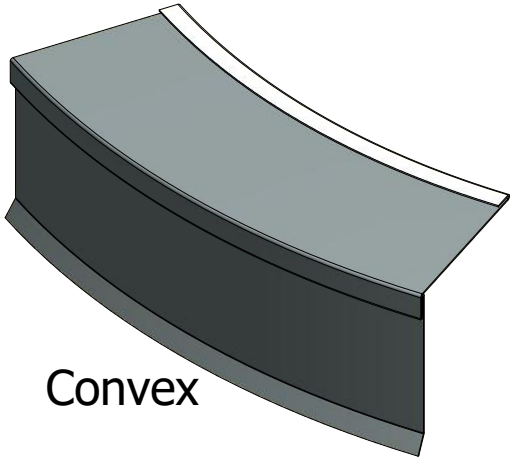

Convex

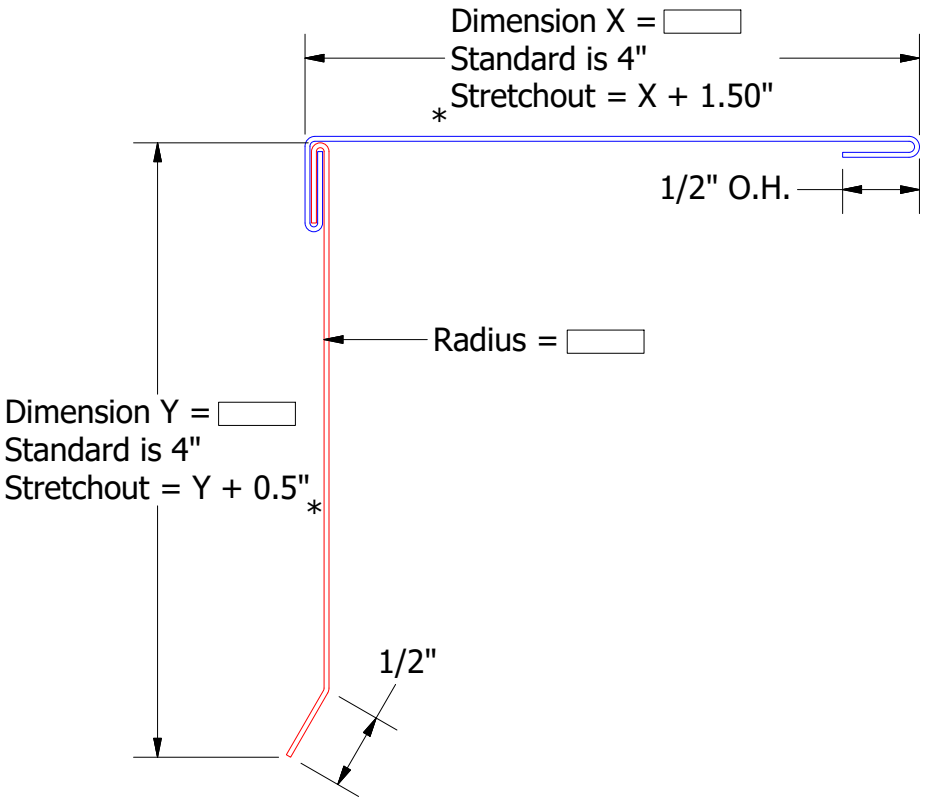

Order # ☐

Concave: ☐

Convex: ☐

Material

Alum ☐

24 ga 55% Al-Zn alloy coated steel with acrylic coating ☐

Finish: ☐

Color: ☐

Trim Length: ☐

Number of Pieces: ☐

Note: * denotes color side.

Note: Trims shown as Standard, Job Specific Dimensions may alter Final Product Design.

REV. NO.	DATE	DESCRIPTION OF REVISION	BY	APP
02	6/28/2022	Added Finial Product Design Disclaimer	KRK	
01	7/31/2019	Added Galv + to Material Offering Updated Cleat and Hem Design	KRK	

ATAS INTERNATIONAL, INC
Allentown PA
610-395-8445
Mesa AZ
480-558-7210

TITLE: Radius Trim Order Sheet - Edge Trim

DWG. NO.	DR PJR	DATE 03-20-14	
MATERIAL	APP	DATE	
	SH. SIZE A	SCALE X:X	

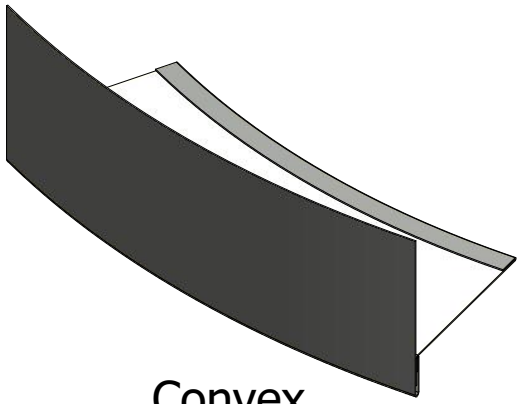

Convex

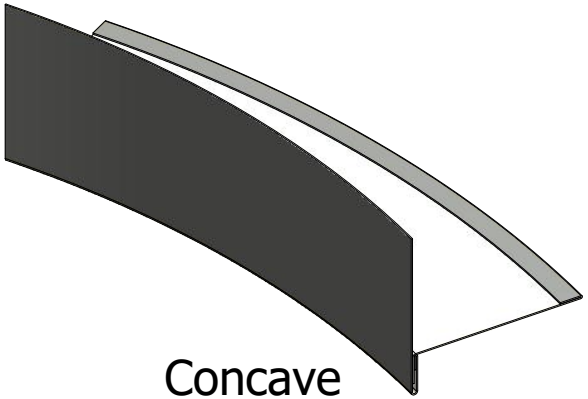

Concave

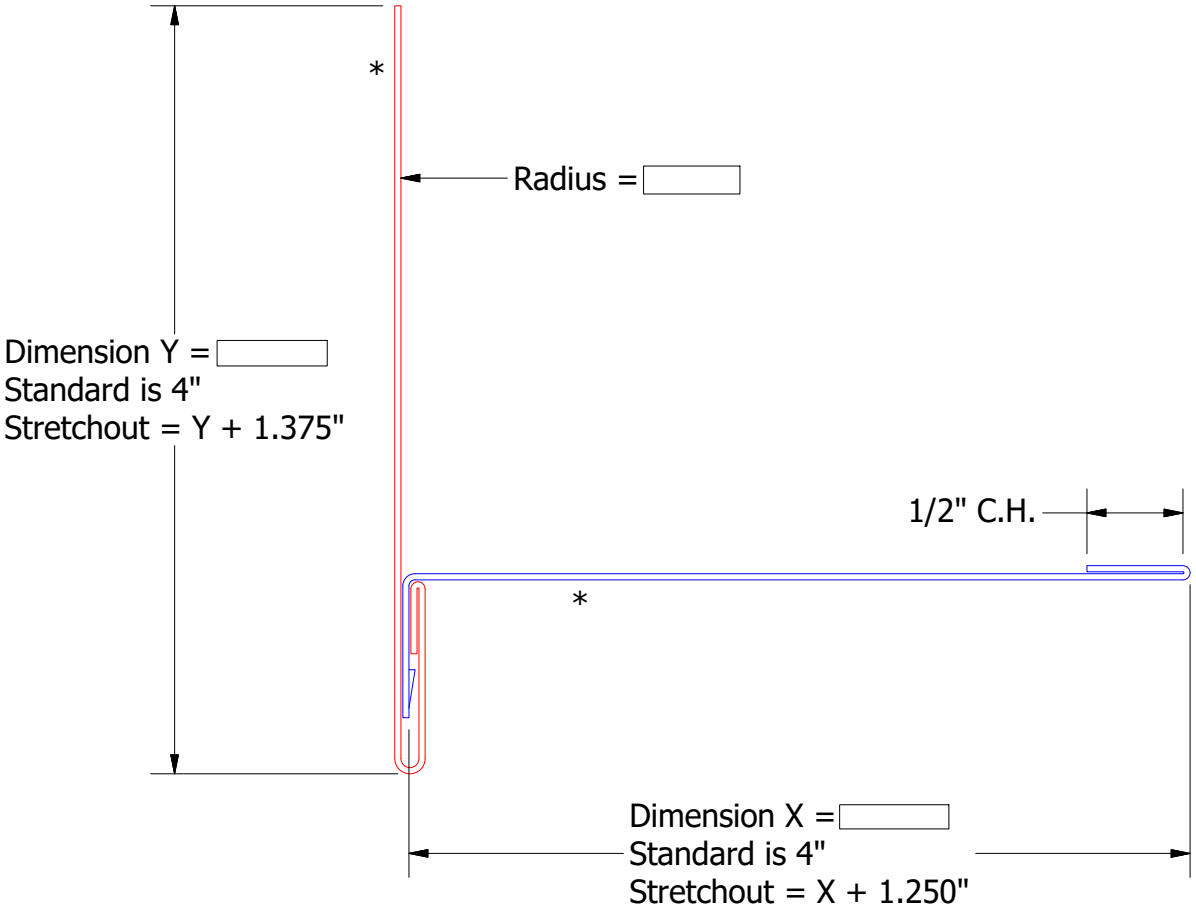

Order #

Concave: ☐

Convex: ☐

Material

Alum ☐ 24 ga 55% Al-Zn alloy coated steel with acrylic coating ☐

Finish:

Color:

Trim Length:

Number of Pieces:

Note: * denotes color side.

Note: Trims shown as Standard, Job Specific Dimensions may alter Final Product Design.

REV. NO.	DATE	DESCRIPTION OF REVISION	BY	APP
01	6/28/2022	Added Finial Product Design Disclaimer	KRK	

ATAS INTERNATIONAL, INC
Allentown PA
610-395-8445
Mesa AZ
480-558-7210

TITLE Radius Trim Order Sheet - Fascia Trim

DWG. NO.	DR KRK	DATE 7/31/2019	
MATERIAL	APP	DATE	
	SH. SIZE A	SCALE X:X	

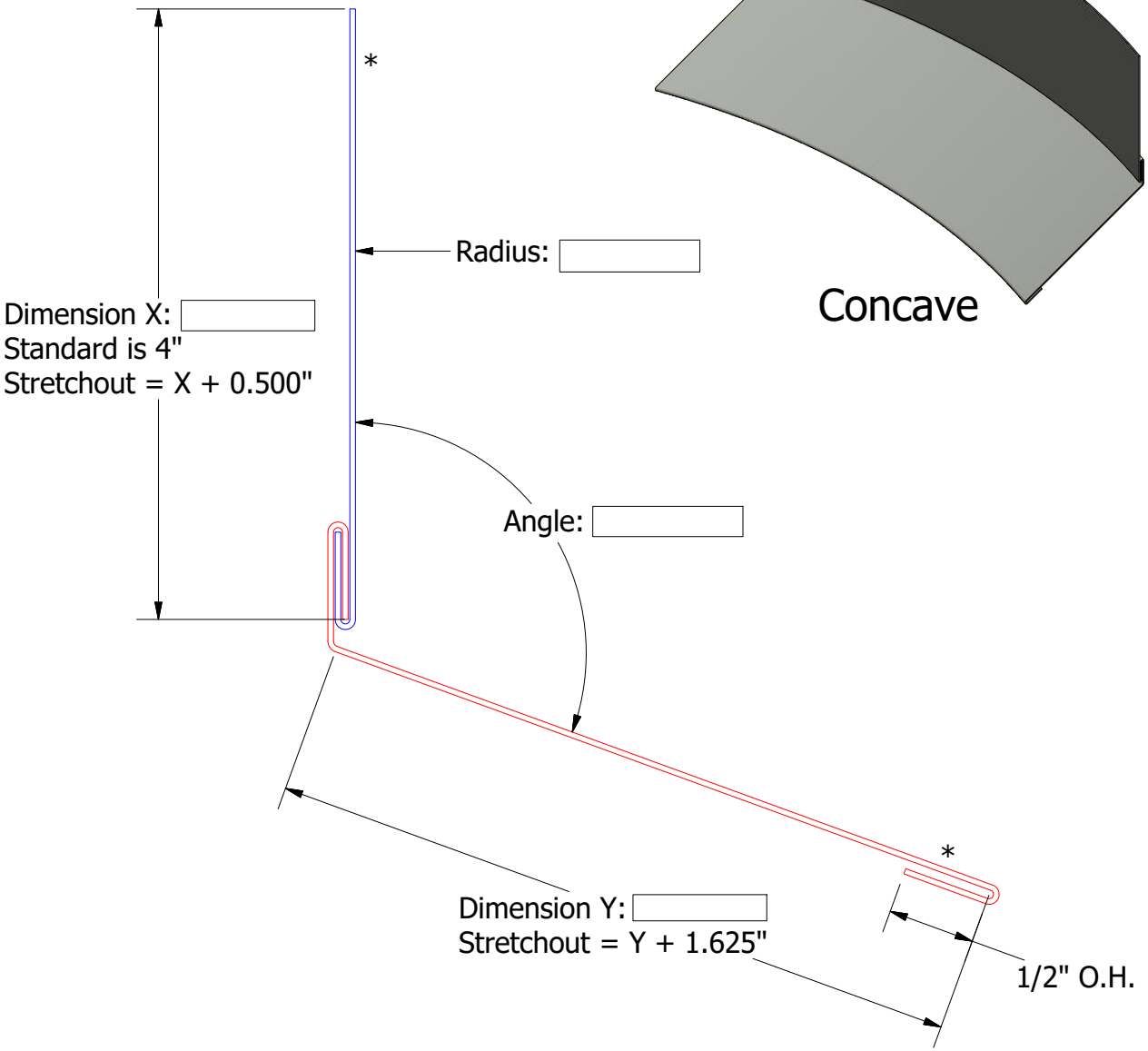

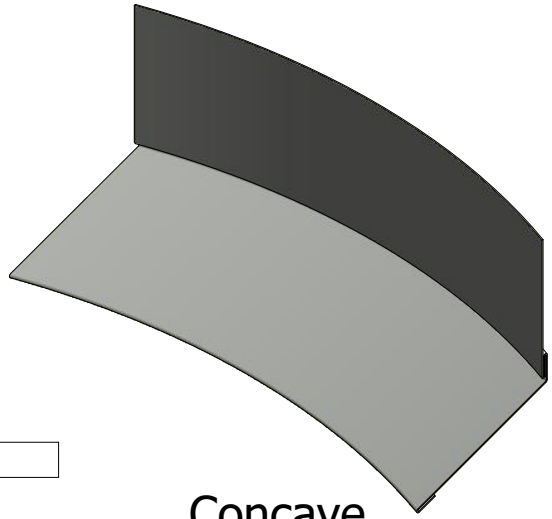

Concave

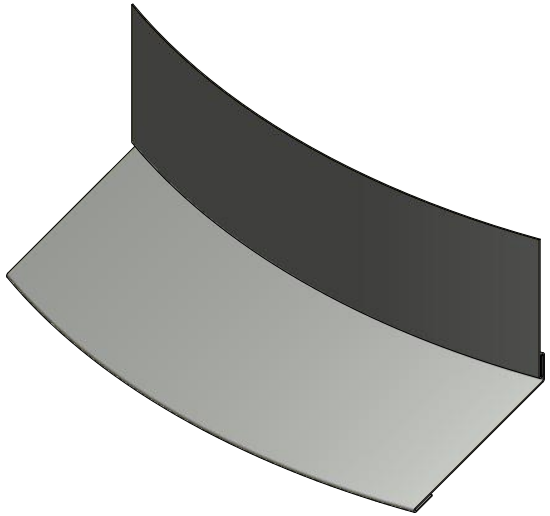

Convex

Order #

Concave:

Convex:

Material

Alum

24 ga 55% Al-Zn alloy coated steel with acrylic coating

Finish:

Color:

Trim Length:

Number of Pieces:

Note: * denotes color side.

Note: Trims shown as Standard, Job Specific Dimensions may alter Final Product Design.

REV. NO.	DATE	DESCRIPTION OF REVISION	BY	APP
02	6/28/2022	Added Finial Product Design Disclaimer	KRK	
01	7/29/2019	Added Galv + to Material Offering	KRK	

ATAS INTERNATIONAL, INC
Allentown PA
610-395-8445
Mesa AZ
480-558-7210

TITLE Radius Trim Order Sheet - Headwall

DWG. NO.	DR KRK	DATE 4/24/2019	
MATERIAL	APP	DATE	
	SH. SIZE A	SCALE X:X	

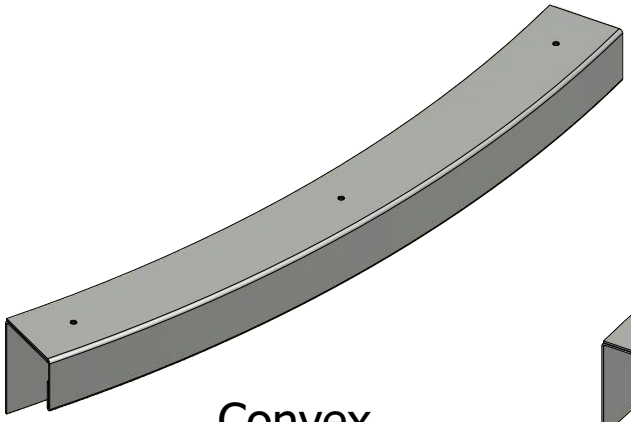

Convex

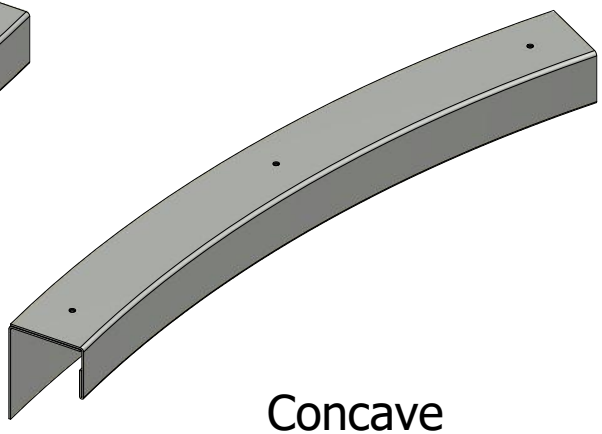

Concave

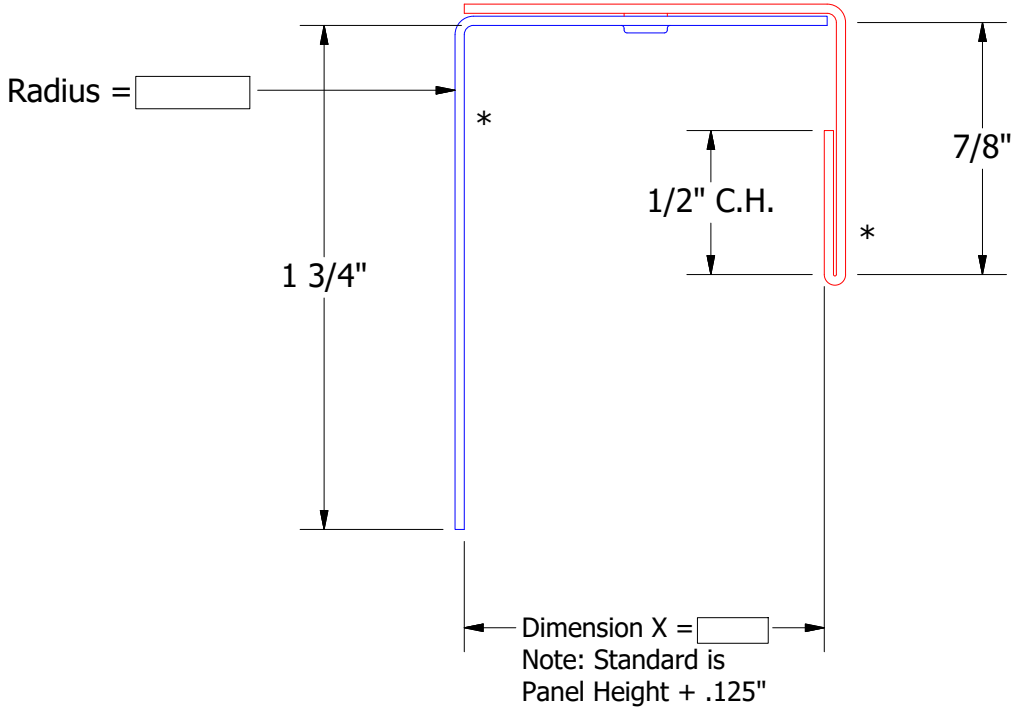

Order #

Concave:

Convex:

Material

Alum

24 ga 55% Al-Zn alloy coated steel with acrylic coating

Finish:

Color:

Trim Length:

Number of Pieces:

ATAS INTERNATIONAL, INC
Allentown PA
610-395-8445
Mesa AZ
480-558-7210

Note: * denotes color side.

Note: Trims shown as Standard, Job Specific Dimensions may alter Final Product Design.

REV. NO.	DATE	DESCRIPTION OF REVISION	BY	APP
02	6/28/2022	Added Finial Product Design Disclaimer	KRK	
01	7/30/2019	Updated Trim Interlocking Style Added Galv + to Material Offering	KRK	

TITLE	Radius Trim Order Sheet - J Channel		
DWG. NO.		DR PJR	DATE 10-10-16
MATERIAL		APP	DATE
		SH. SIZE A	SCALE X:X

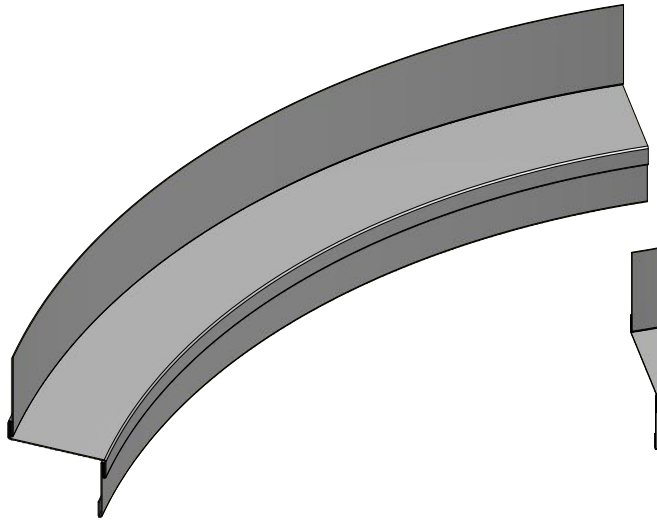

Concave

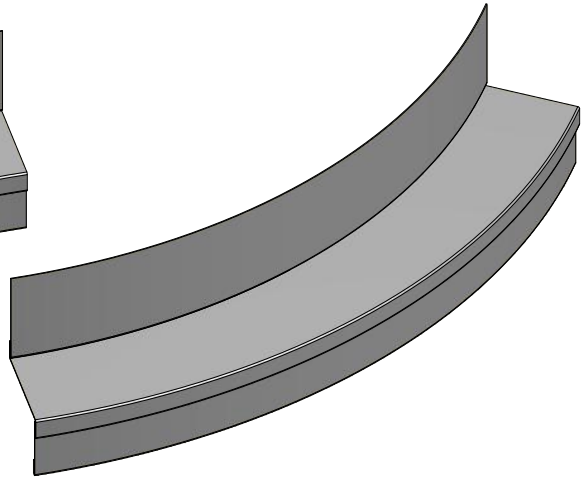

Convex

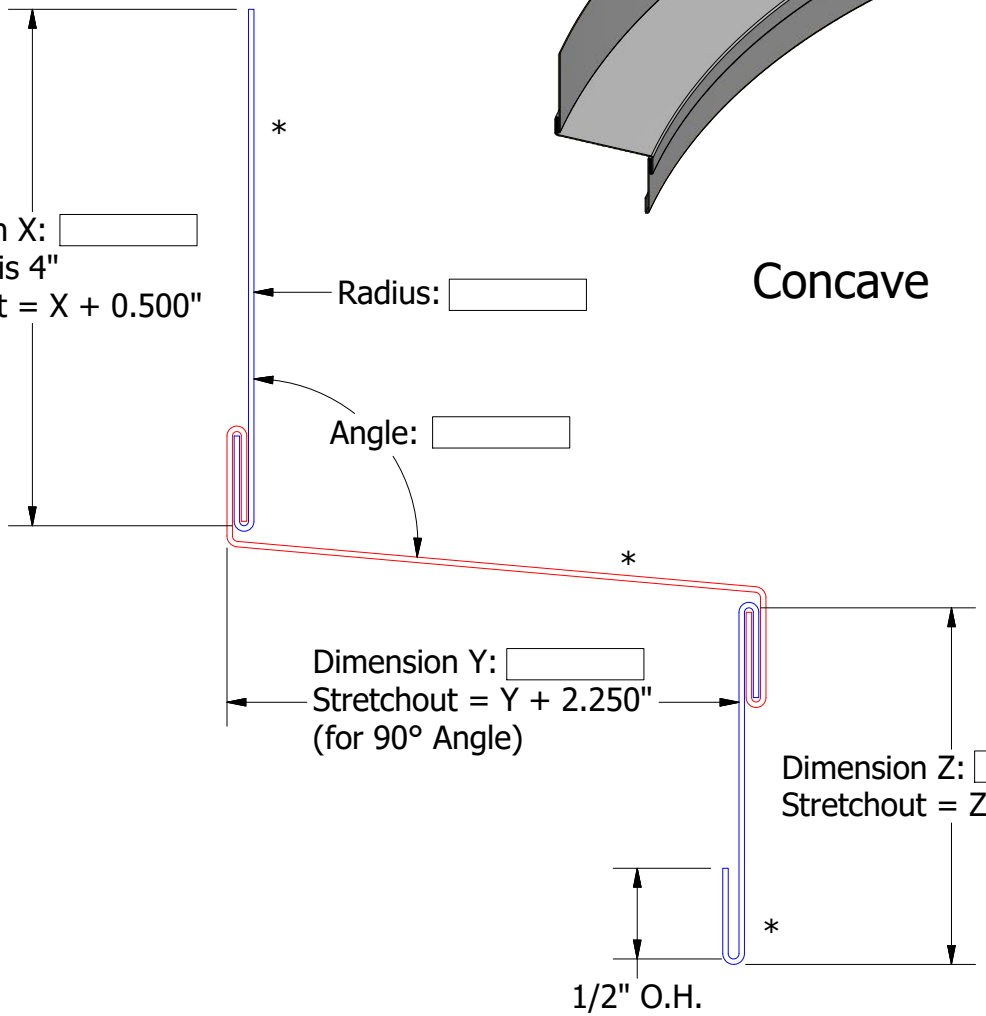

Order #

Concave:

Convex:

Material

Alum

24 ga 55% Al-Zn alloy coated steel with acrylic coating

Finish:

Color:

Trim Length:

Number of Pieces:

Note: * denotes color side.

Note: Trims shown as Standard, Job Specific Dimensions may alter Final Product Design.

REV. NO.	DATE	DESCRIPTION OF REVISION	BY	APP
01	6/28/2022	Added Finial Product Design Disclaimer	KRK	

ATAS INTERNATIONAL, INC
Allentown PA
610-395-8445
Mesa AZ
480-558-7210

TITLE Radius Trim Order Sheet - Ledge Flashing

DWG. NO.	DR KRK	DATE 10/19/2020
MATERIAL	APP	DATE
	SH. SIZE A	SCALE X:X

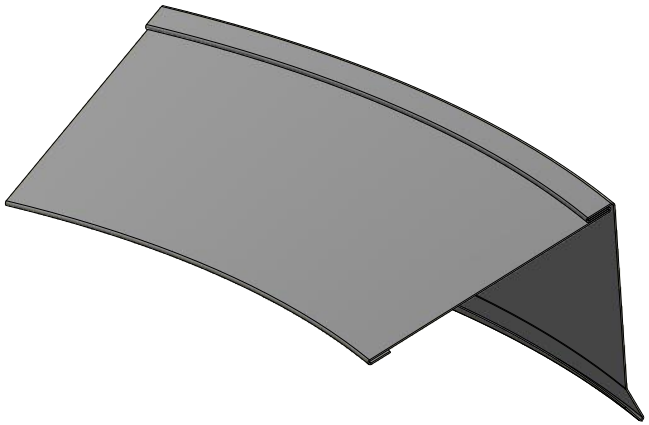

Concave

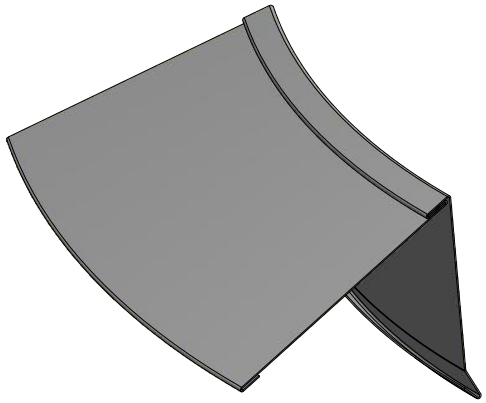

Convex

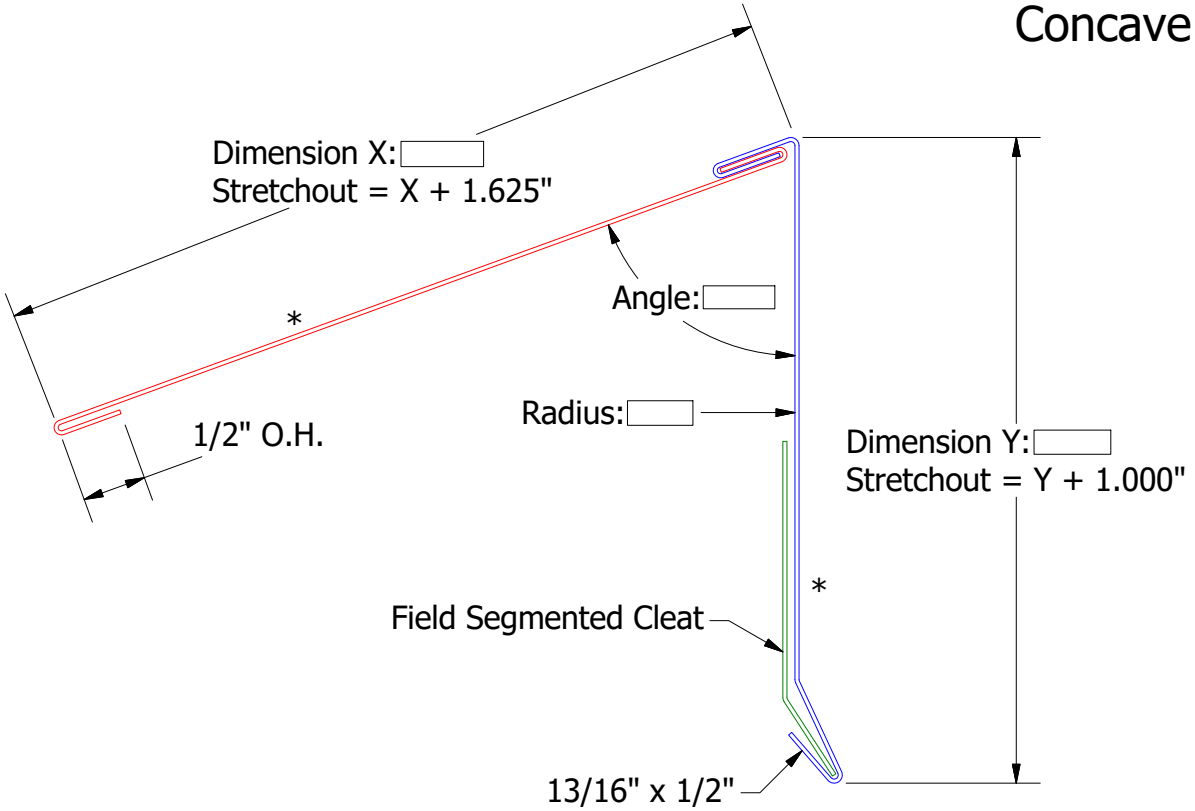

Order #

Concave:

Convex:

Material

Alum

24 ga 55% Al-Zn alloy coated steel with acrylic coating

Finish:

Color:

Trim Length:

Number of Pieces:

ATAS INTERNATIONAL, INC
Allentown PA
610-395-8445
Mesa AZ
480-558-7210

Note: * denotes color side.
Note: Trims shown as Standard, Job Specific Dimensions may alter Final Product Design.

REV. NO.	DATE	DESCRIPTION OF REVISION	BY	APP
01	6/28/2022	Added Finial Product Design Disclaimer	KRK	

TITLE Radius Trim Order Sheet - Shed Ridge

DWG. NO.	DR KRK	DATE 10/27/2020	
MATERIAL	APP	DATE	
	SH. SIZE A	SCALE X:X	

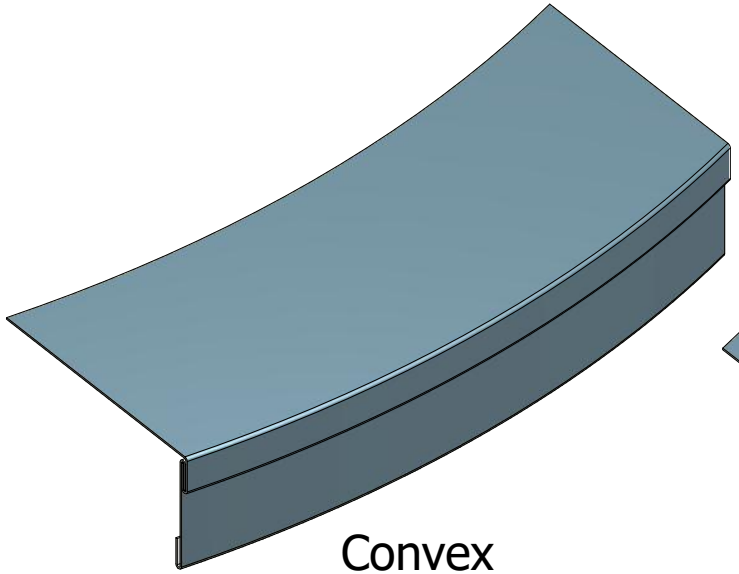

Convex

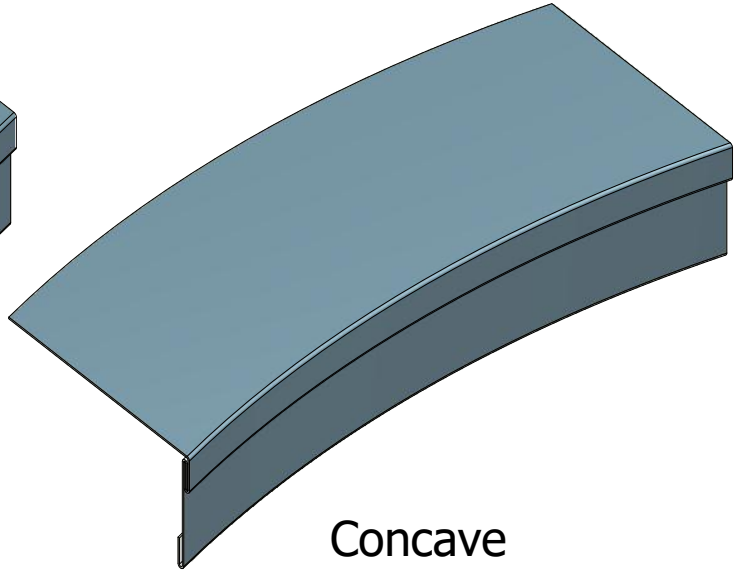

Concave

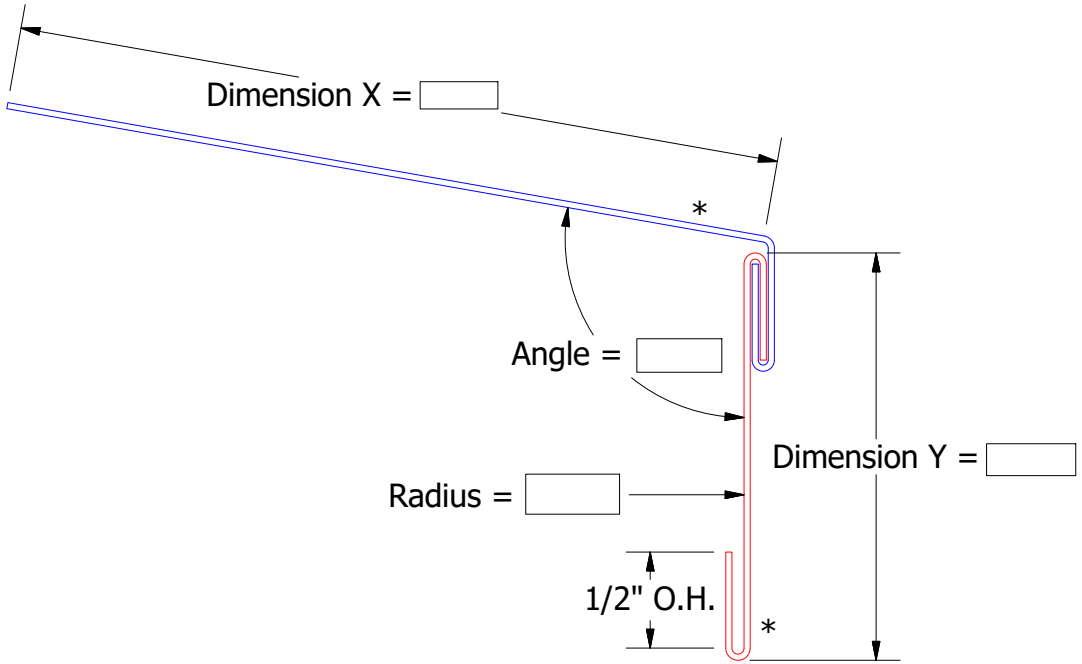

Order #

Concave:

Convex:

Material

Alum

24 ga 55% Al-Zn alloy coated steel with acrylic coating

Finish:

Color:

Trim Length:

Number of Pieces:

ATAS INTERNATIONAL, INC
Allentown PA
610-395-8445
Mesa AZ
480-558-7210

Note: * denotes color side.
Note: Trims shown as Standard, Job Specific Dimensions may alter Final Product Design.

REV. NO.	DATE	DESCRIPTION OF REVISION	BY	APP
01	6/28/2022	Added Finial Product Design Disclaimer	KRK	

TITLE: Radius Trim Order Sheet - Window Sill			
DWG. NO.	DR KRK	DATE 12/19/2019	
MATERIAL	APP	DATE	
	SH. SIZE A	SCALE X:X	