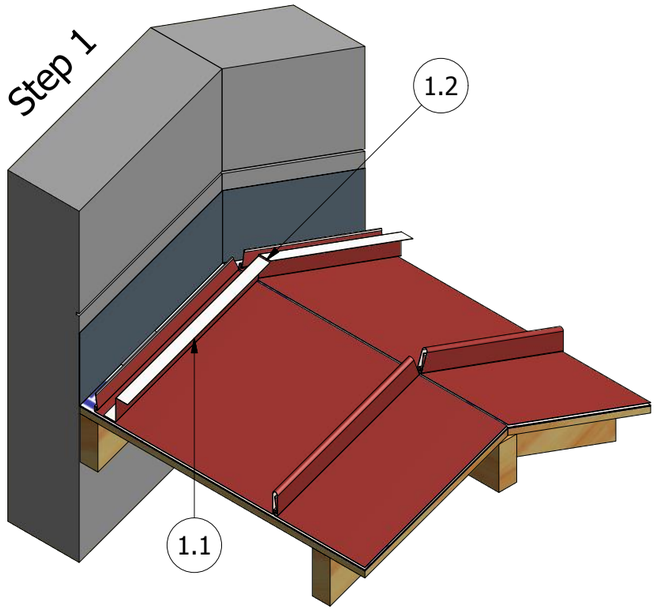

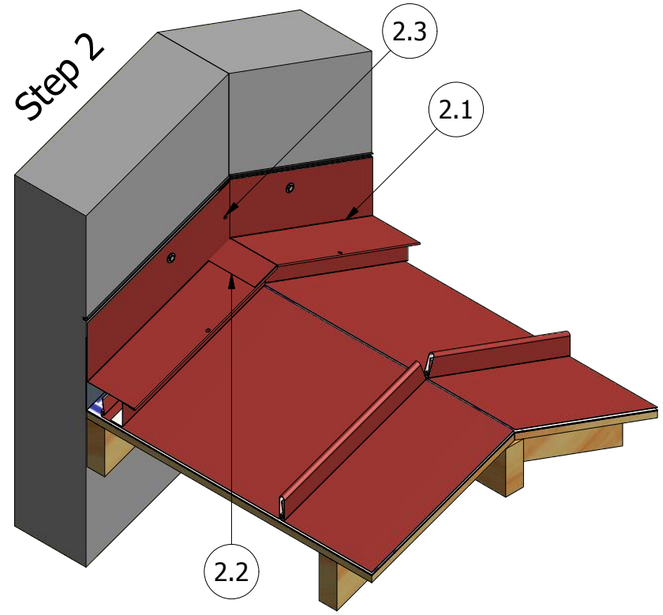

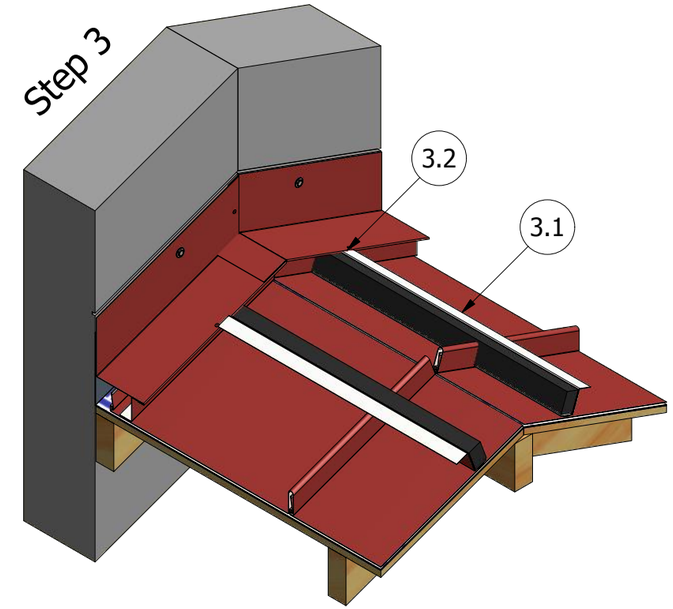

Step 1.1 Install Sidewall Z Closures on to Roof Panels with appropriate accessories.
Step 1.2 Field Notch so that the Z Clousres butt at the top of the Ridge.

Step 2.1 Install Sidewall Trim.
Step 2.2 On one of the Sidewall Trims Field Notch and Bend Tab over other Sidewall Trim. (Seal with appropriate Sealant)
Step 2.3 On same Sidewall Trim Field Notch Tab to run behind other Sidewall Trim. (Seal with appropriate Sealant and Pop Rivet)

Step 3.1 Install Ridge Z Clousres with appropriate accessories.
Step 3.2 Notch top legs of Ridge Z Closures back so it will run up against Sidewall Z Closures.

Step 4.1 Install Ridge Cap. (Notch Ridge Cap Hems back so that it sits flush against Sidewall Trim)
Step 4.2 Seal with appropriate sealant and Pop Rivet to Sidewall Trims.

Step 5.1 Install Counterflashing.
Step 5.2 Field Notch Counterflashing so that they butt at the top of the Ridge.
Step 5.3 Notch Tab in one of the Counterflashings to be able to seal and Pop Rivet both Counterflashings together.

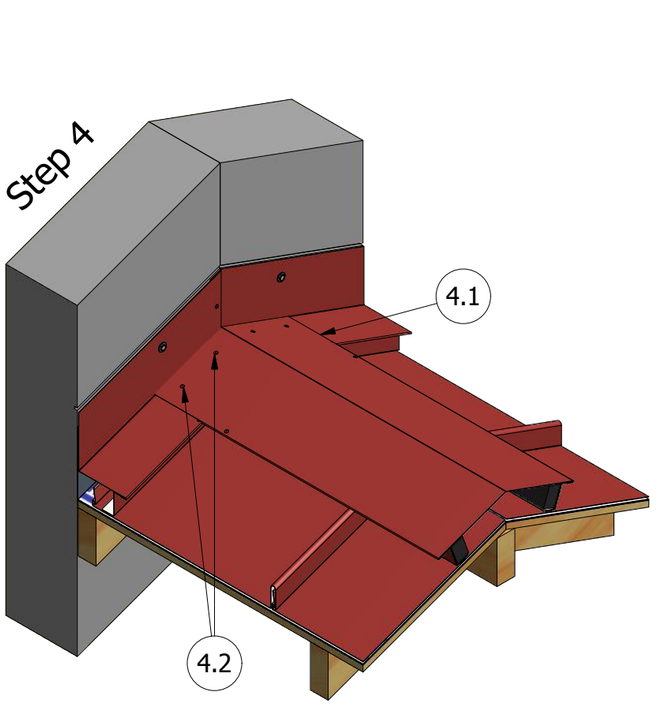

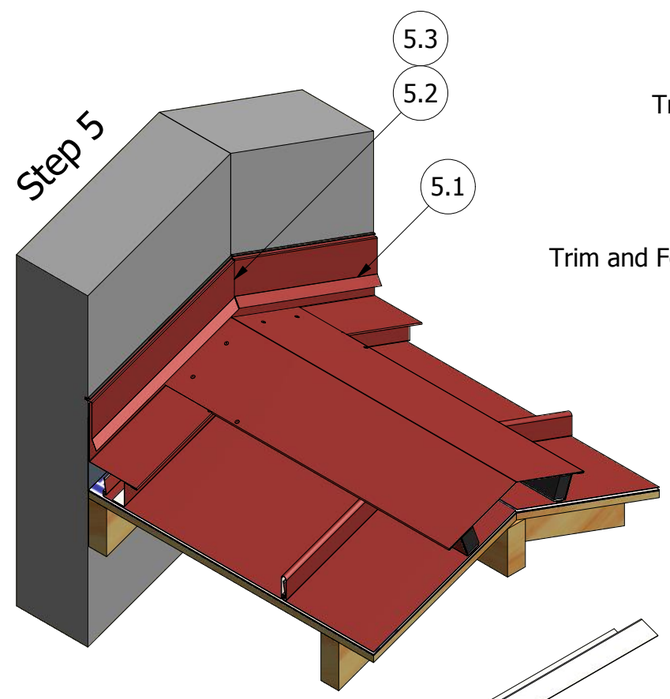

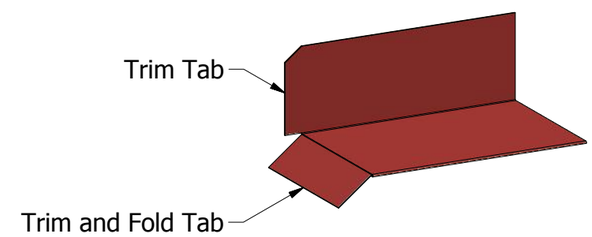

Step 2.2 & 2.3 - Sidewall Trim

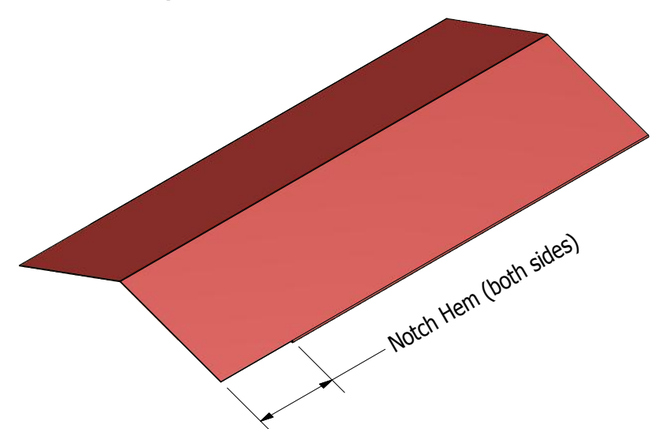

Step 4.1 - Ridge Cap

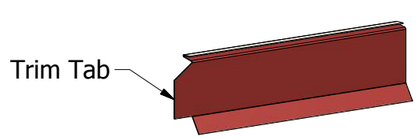

Step 5.3 - Counterflashing

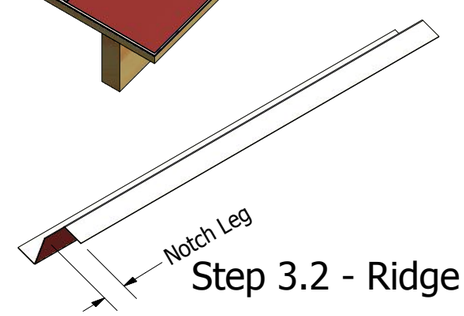

Step 3.2 - Ridge Z Closure

ATAS INTERNATIONAL, INC
Allentown PA
610-395-8445
Mesa AZ
480-558-7210

REV. NO.	DATE	DESCRIPTION OF REVISION	BY	APP

TITLE	Standing Seam Ridge to Sidewall Detail		
DWG. NO.		DR KRK	DATE 2/20/2015
		APP	DATE
MATERIAL		SH. SIZE B	SCALE X:X