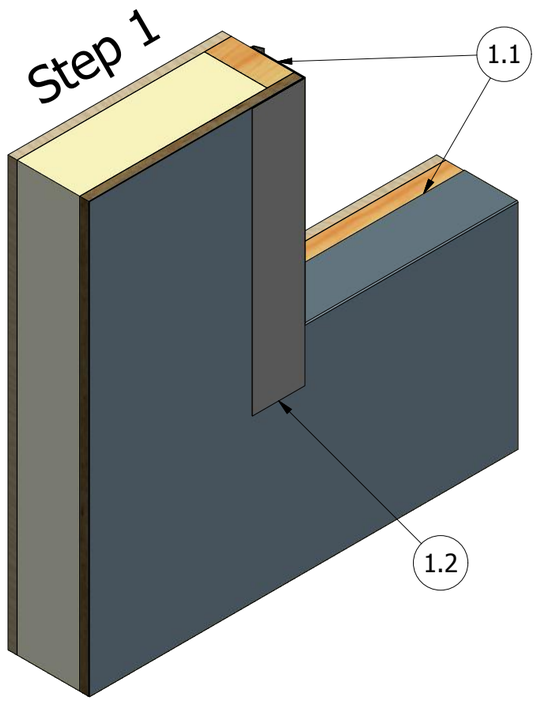

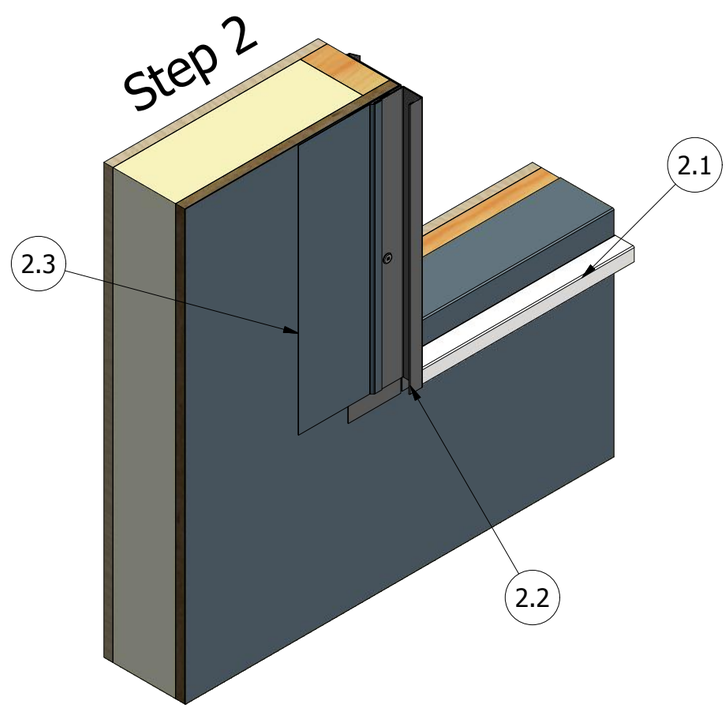

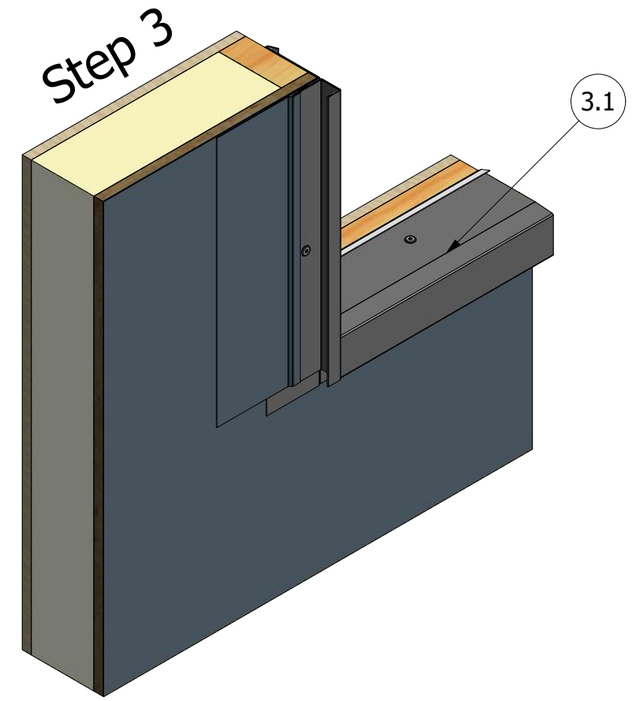

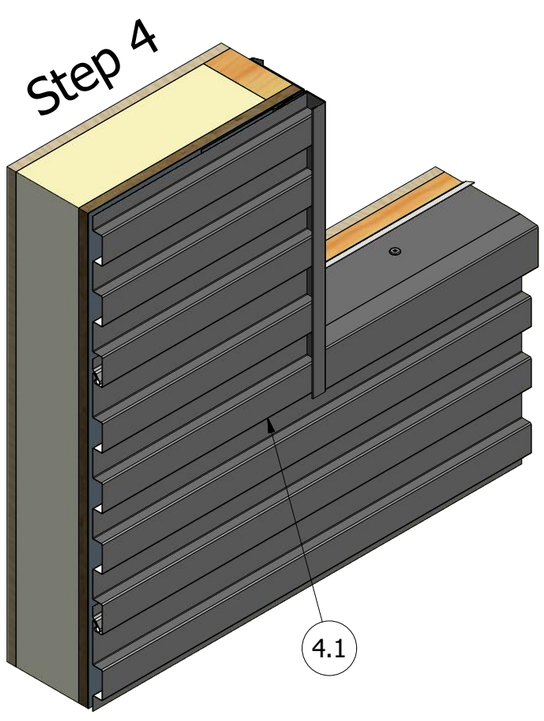

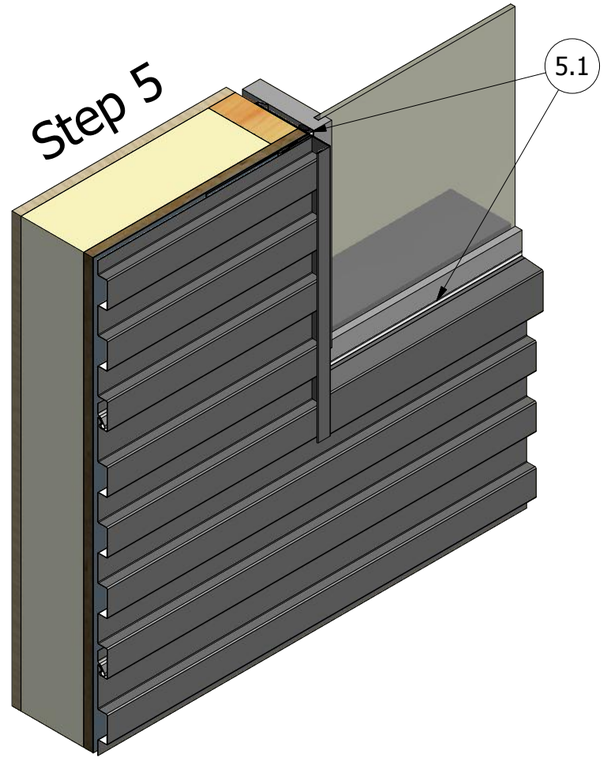

Step 1.1 Run Underlayment on Substrate and return into Window opening.
Step 1.2 Install Jamb Angle Trim. (field notch so leg against wall runs long)

Step 2.1 Install Window Sill J Channel with appropriate Fasteners.
Step 2.2 Install Jamb J Channel just below Window Sill J Channel and on top of Butyl Tape with Angle Trim for color.
Step 2.3 Strip in J Channel with Membrane to create a positive flow over trim.

Step 3.1 Install Window Sill Trim onto Window Sill J Channel.

Step 4.1 Install Wall Panels.
Step 4.2 Field trim panels to fit around trim. (use other appropriate trim when conditions warrant)

Step 5.1 When windows are installed use Backer Rod and Sealant between Window Frame and Trim.

ATAS INTERNATIONAL, INC
Allentown PA
610-395-8445
Mesa AZ
480-558-7210

REV. NO.	DATE	DESCRIPTION OF REVISION	BY	APP

TITLE: Jamb to Window Sill Solid Substrate Detail			
DWG. NO.	DR: KRK	DATE: 4/14/2015	
	APP	DATE	
MATERIAL	SH. SIZE: B	SCALE: X:X	