# Vertical Panel

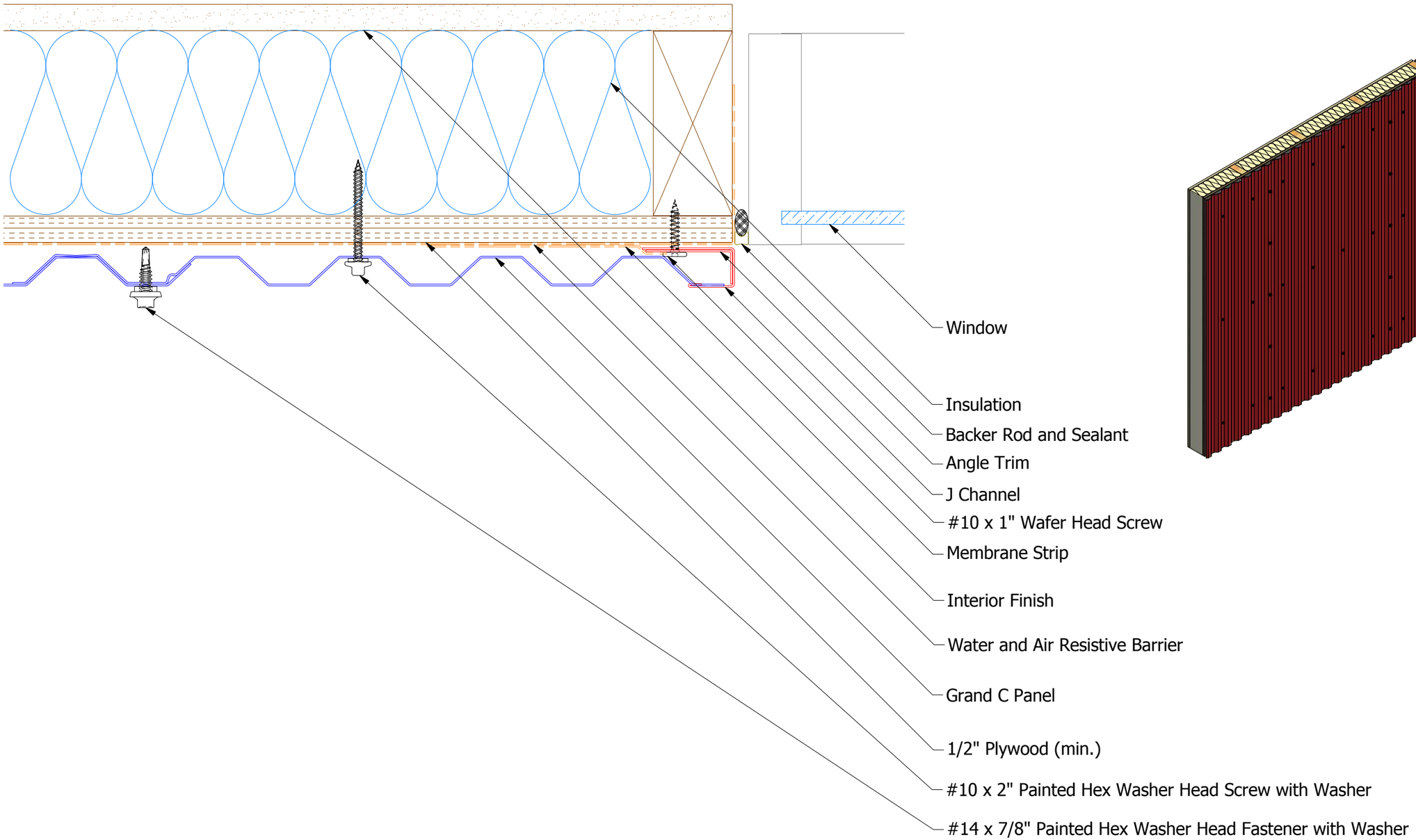


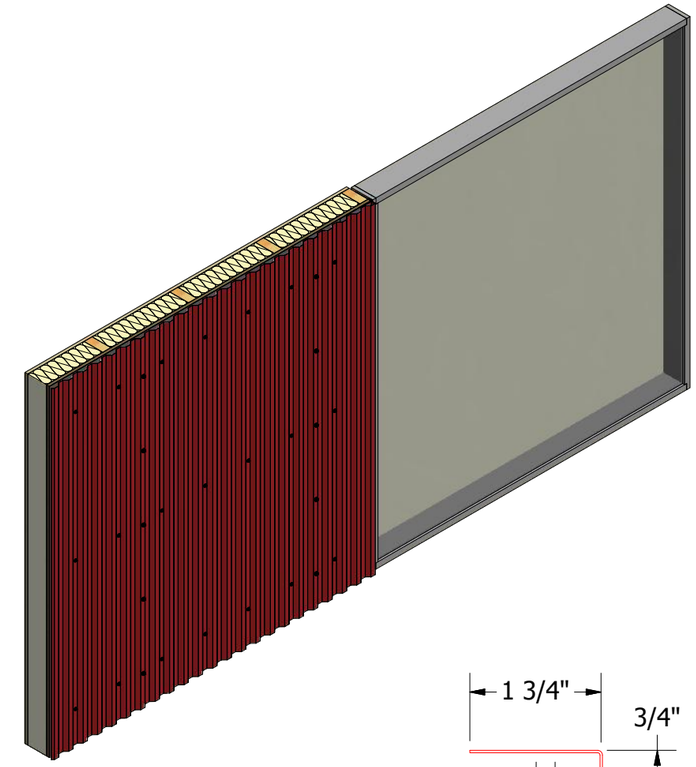

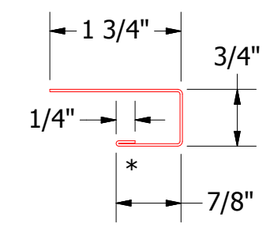


BGA034 - J Channel

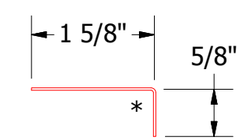


BGA680 - Angle Trim

ATAS INTERNATIONAL, INC
Allentown PA
610-395-8445
Mesa AZ
480-558-7210

| REV. NO. | DATE | DESCRIPTION OF REVISION | BY | APP |
|---|---|---|---|---|
| | | | | |
| | | | | |
| | | | | |

| | | | |
|---|---|---|---|
| TITLE Grand C Jamb Existing Window Detail | | | |
| DWG. NO. | DR MBP | DATE 7/18/18 | |
| | APP | DATE | |
| MATERIAL | SH. SIZE B | SCALE X:X | |