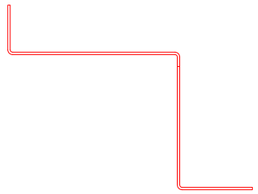

Note: Start/End Vented Z Closure runs with at least 2'-0" of Non-Vent Z Closures.

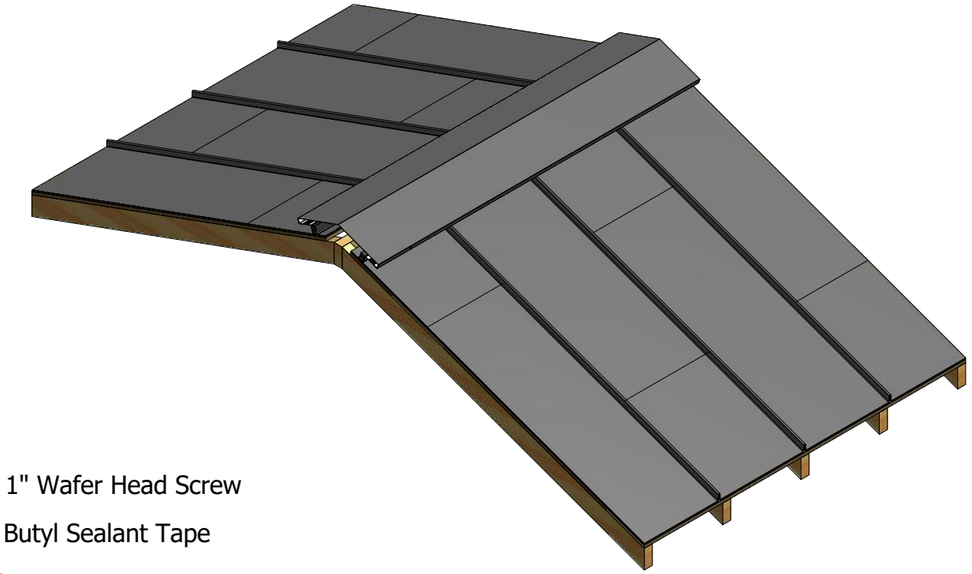

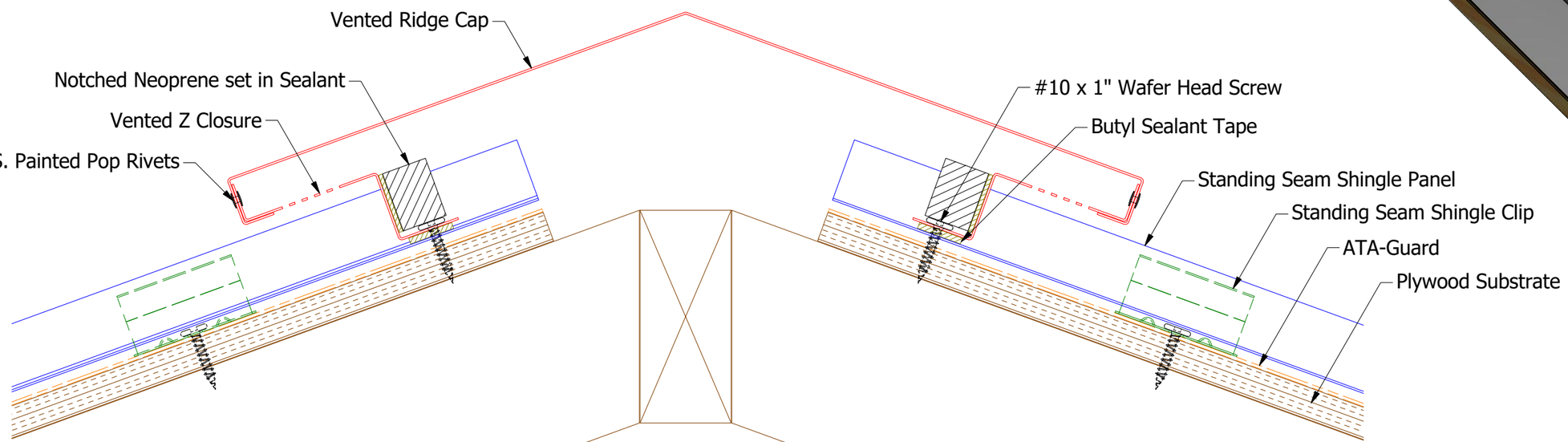

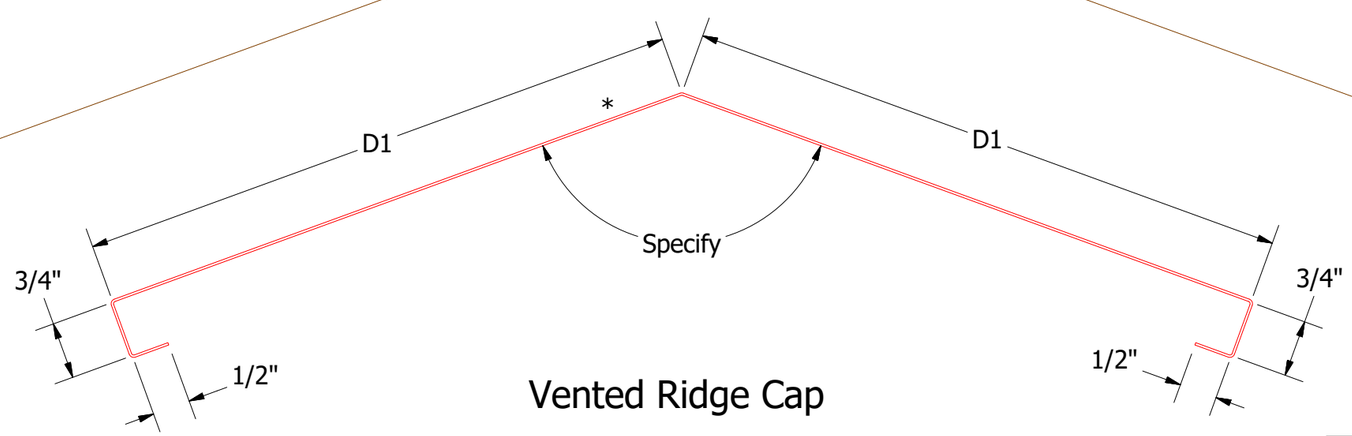

Vented Ridge Cap

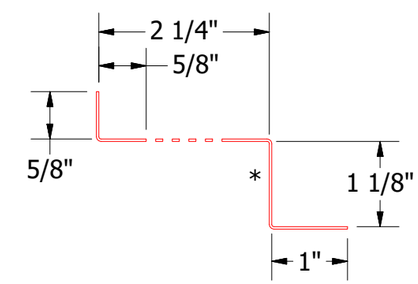

HSA911-Vented Z Closure

Note: * denotes color side.

REV. NO.	DATE	DESCRIPTION OF REVISION	BY	APP

ATAS INTERNATIONAL, INC
Allentown PA
610-395-8445
Mesa AZ
480-558-7210

TITLE: Standing Seam Shingle Vented Ridge Detail

DWG. NO.		DR MBP	DATE 6/7/2019
		APP	DATE
MATERIAL		SH. SIZE B	SCALE X:X