Z Closure (by others)

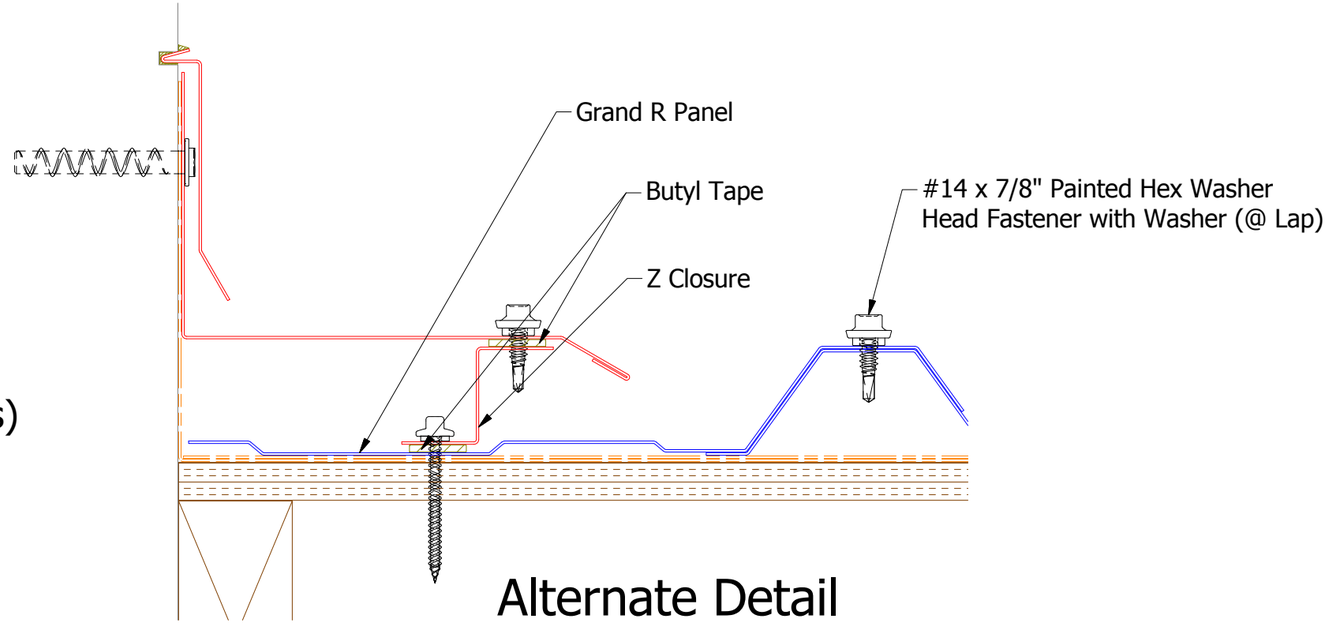

Alternate Detail

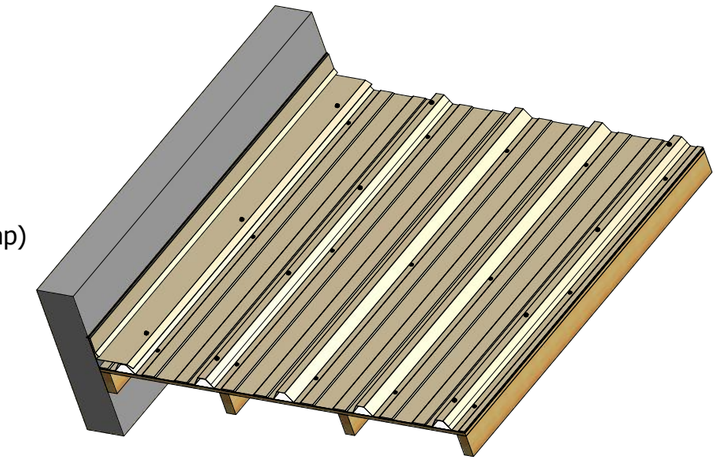

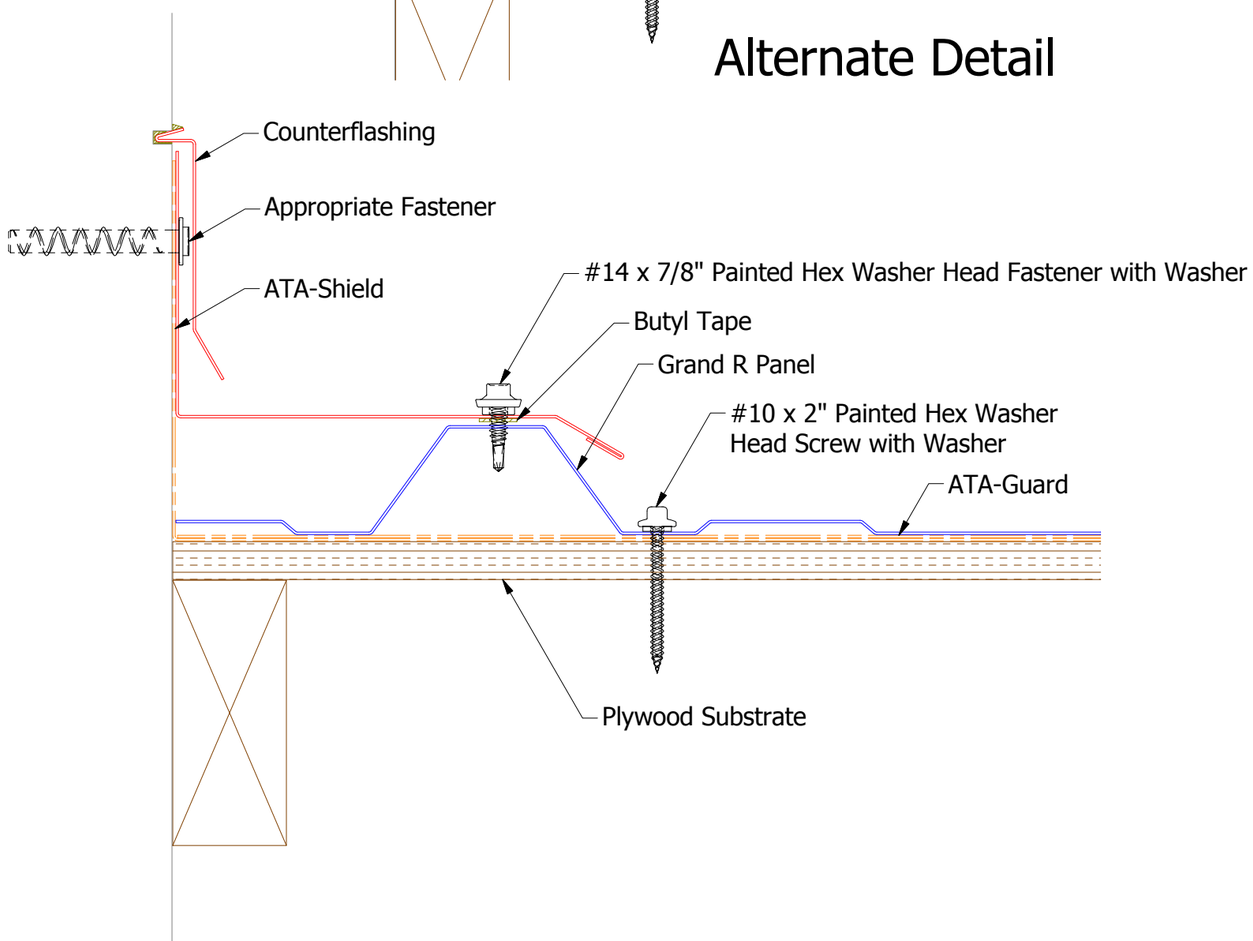

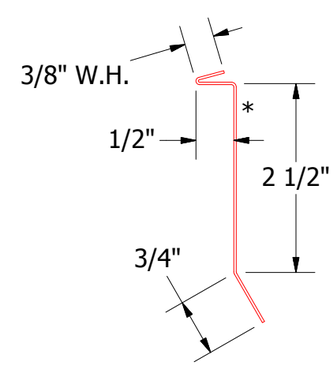

BWA980-Counterflashing

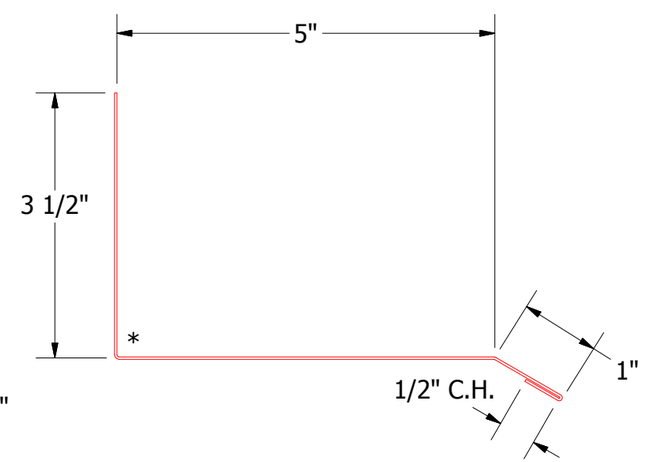

BWA410-Sidewall Trim

ATAS INTERNATIONAL, INC
Allentown PA
610-395-8445
Mesa AZ
480-558-7210

REV. NO.	DATE	DESCRIPTION OF REVISION	BY	APP
1	3/14/2019	Added Alternative Detail View and Changed Sidewall Trim	DMR	

TITLE	Grand R Sidewall Detail		
DWG. NO.		DR KRK	DATE 1/22/2016
		APP	DATE
MATERIAL		SH. SIZE B	SCALE X:X