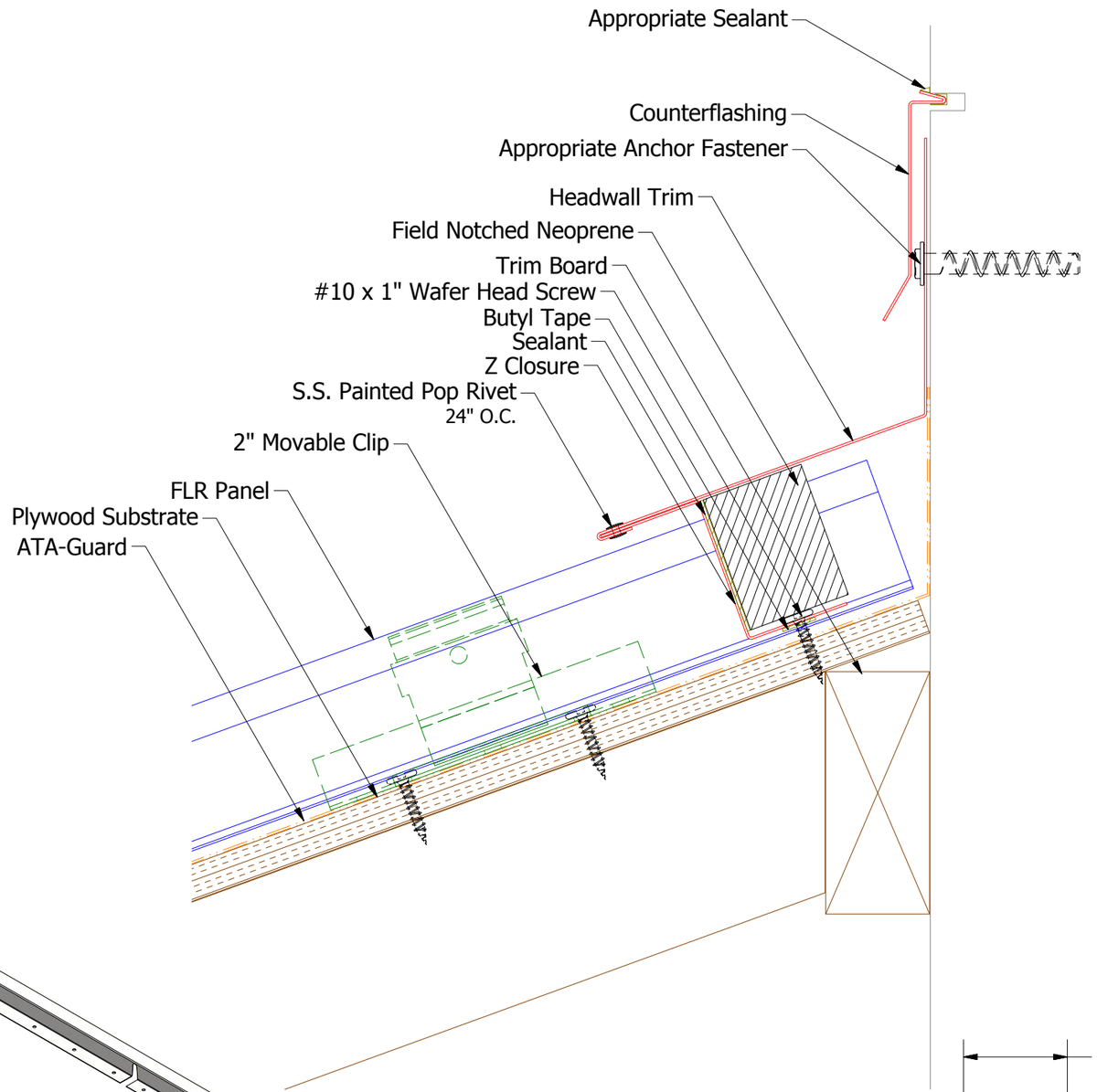

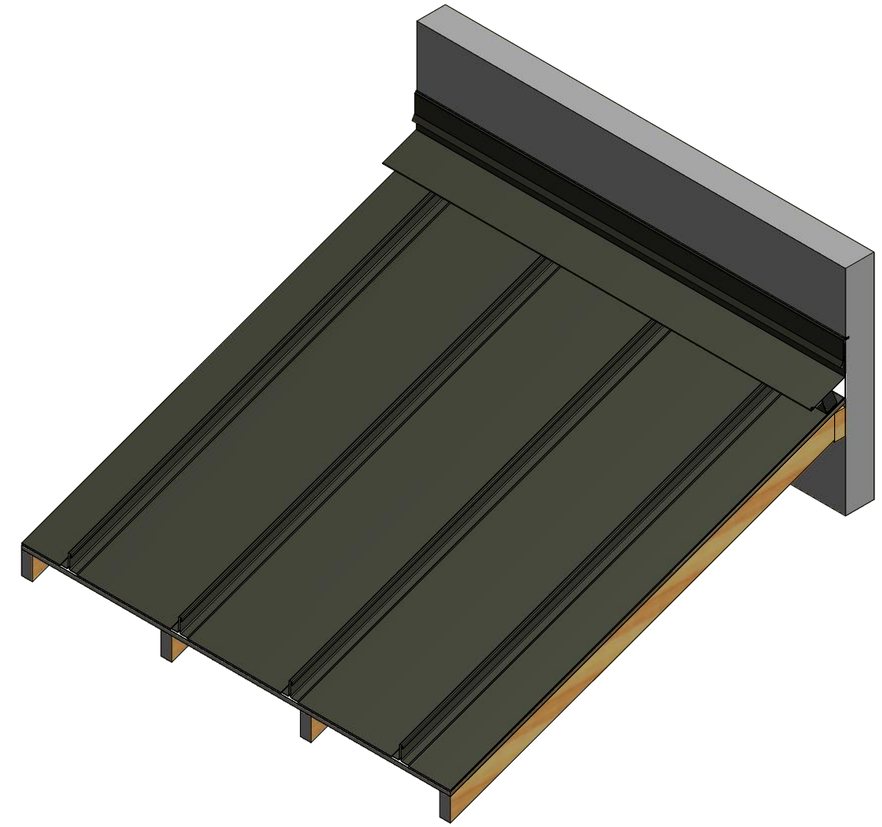

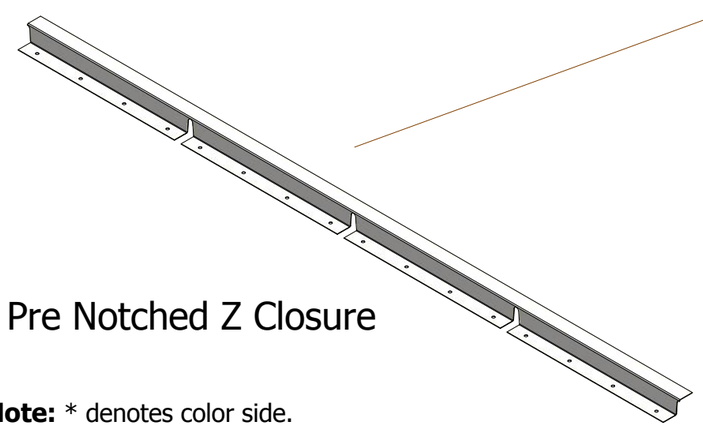

Pre Notched Z Closure

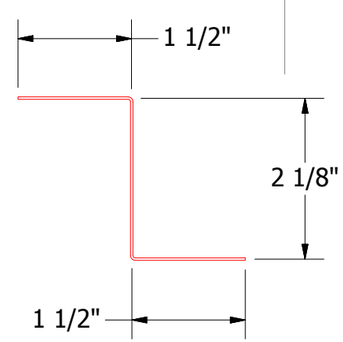

Z Closure

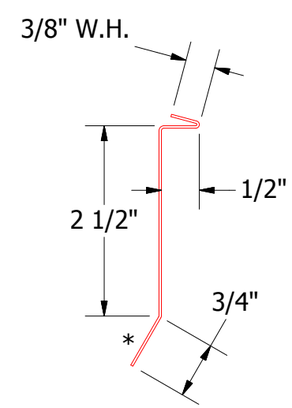

Counterflashing

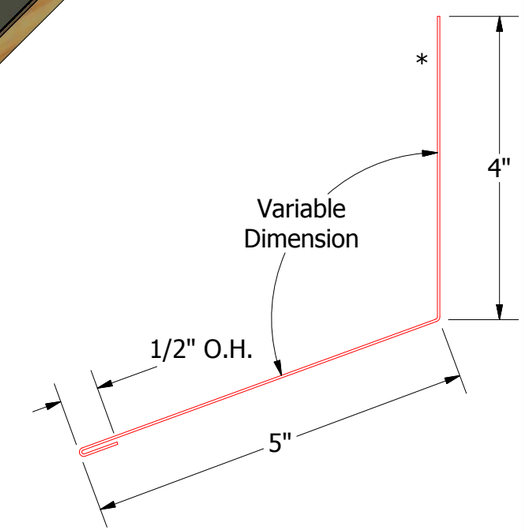

Headwall Trim

Note: * denotes color side.

Note: Neoprene Closures are not required if Factory Pre Notched Z Closures are utilized.

REV. NO.	DATE	DESCRIPTION OF REVISION	BY	APP
2	5/31/2019	Updated Clip Information	AJZ	KRK
1	6/22/18	Updated Substrate and Titles	MBP	

ATAS INTERNATIONAL, INC
Allentown PA
610-395-8445
Mesa AZ
480-558-7210

TITLE: FLR Headwall Detail

DWG. NO.

MATERIAL

DR: KRK | DATE: 10/2/2014

APP | DATE

SH. SIZE: B | SCALE: X:X