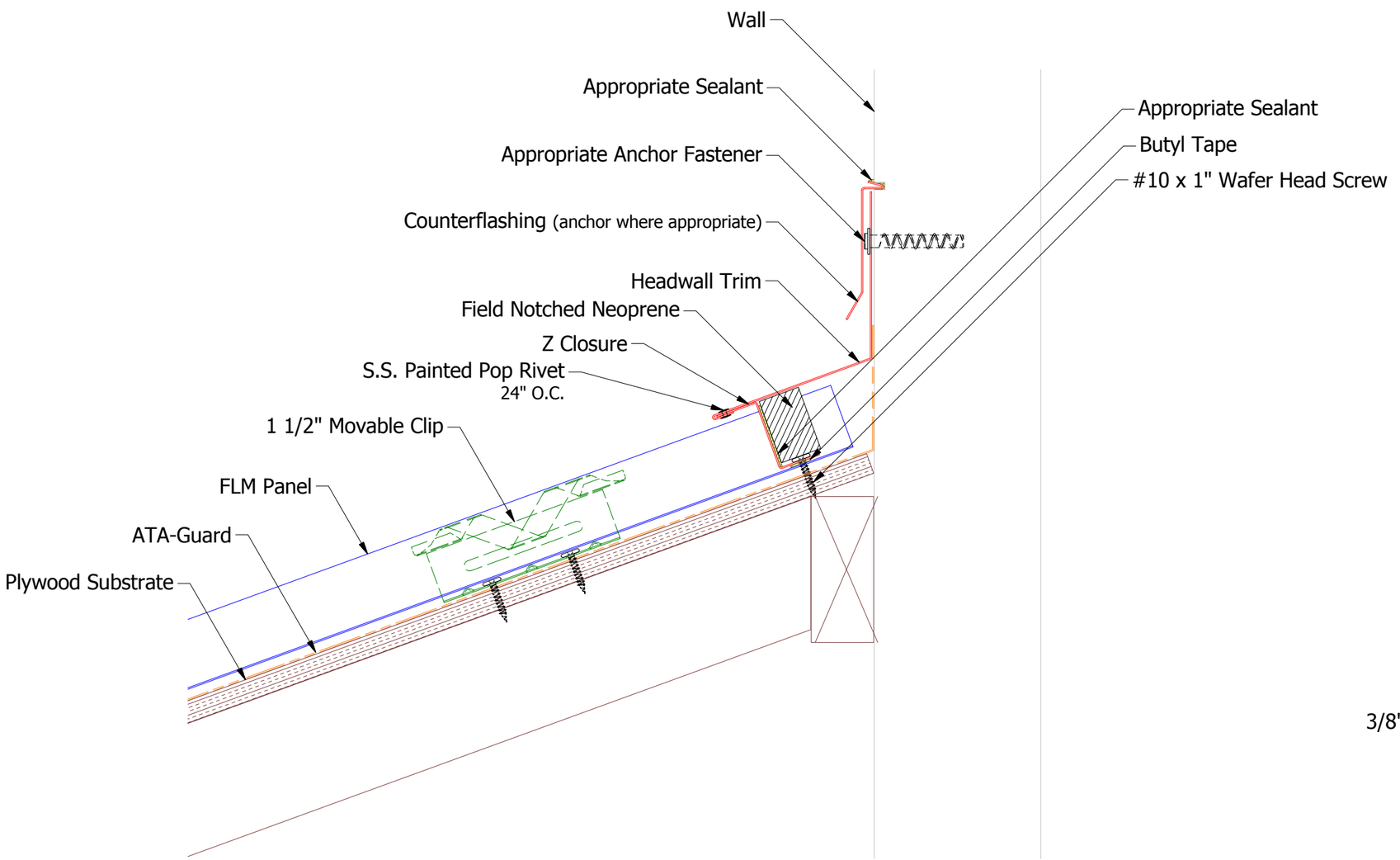

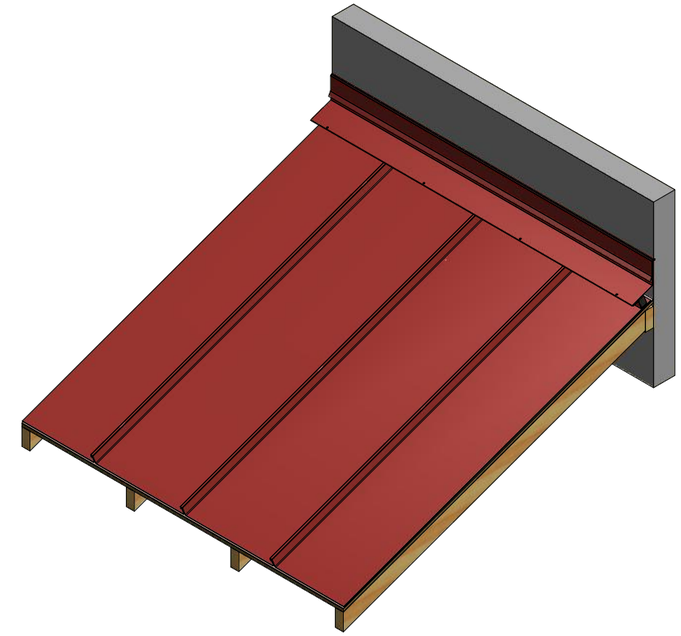

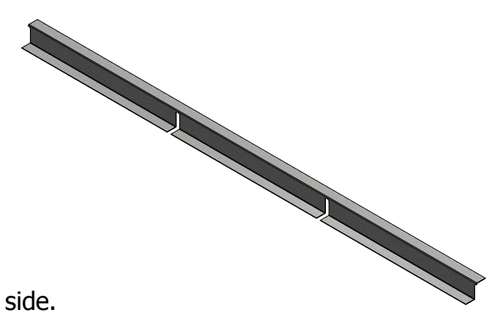

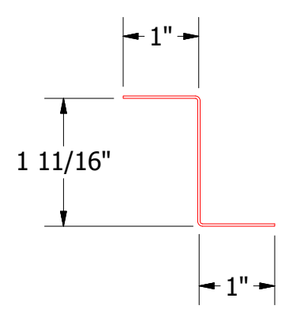

FLA916-Z Closure

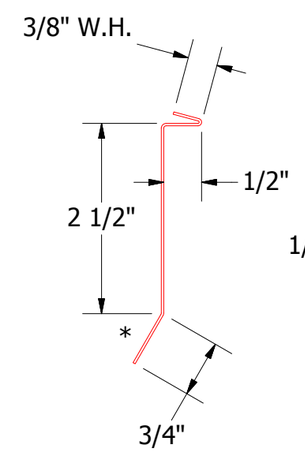

FLA980-Counterflashing

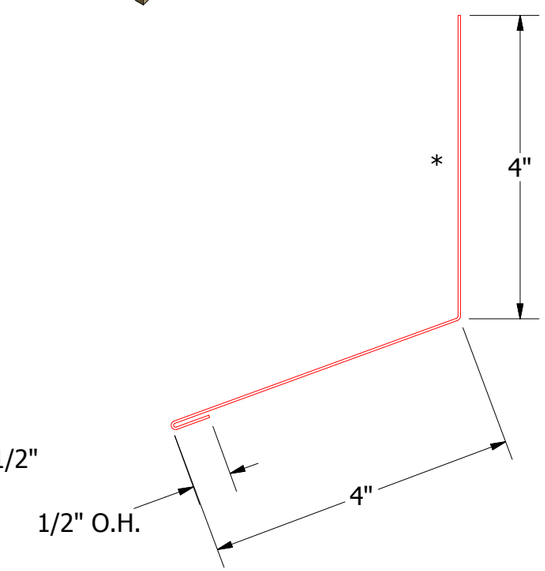

FLA500-Headwall Transition

Note: * denotes color side.

Note: Neoprene Closures are not required if Factory Pre Notched Z Closures are utilized.

REV. NO.	DATE	DESCRIPTION OF REVISION	BY	APP
2	5/30/2019	Updated Clip Information	AJZ	KRK
1	6/20/18	Updating models and dimensions	JC	

ATAS INTERNATIONAL, INC
Allentown PA
610-395-8445
Mesa AZ
480-558-7210

TITLE: FLM Headwall Detail

DWG. NO.

DR: KRK — DATE: 9/9/2014

APP — DATE

MATERIAL

SH. SIZE: B — SCALE: X:X