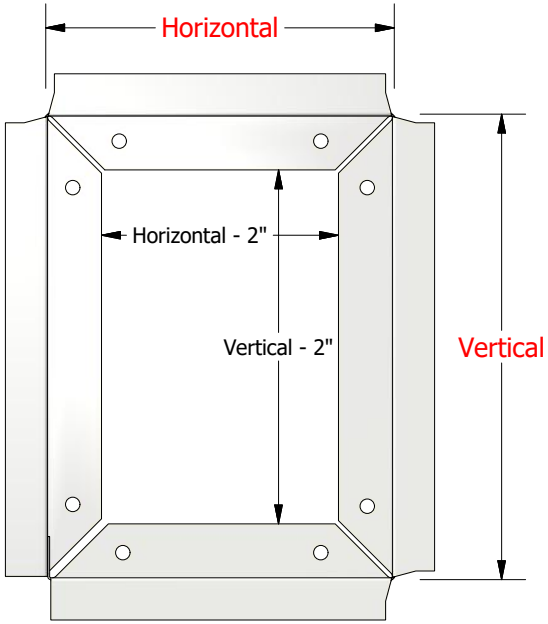

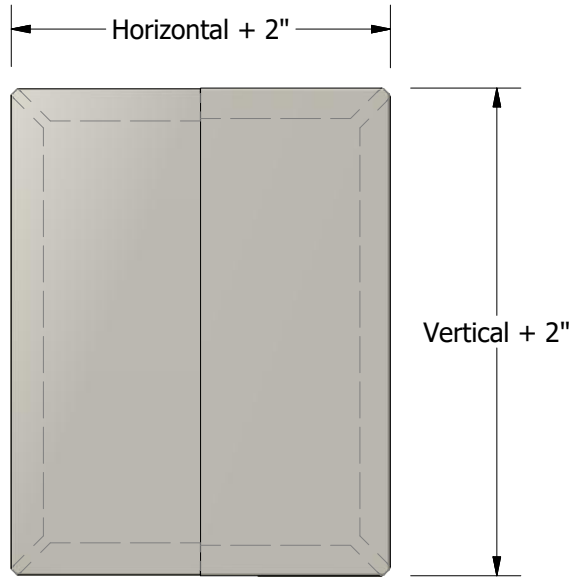

If a pre-punched shape is needed on cover specify it's dimensions and location.

NOTE: Retrofit covers are beneficial when a standard one piece cover cannot be slid over the feature being flashed. The cover seam can either be oriented vertically (as shown) or horizontally.

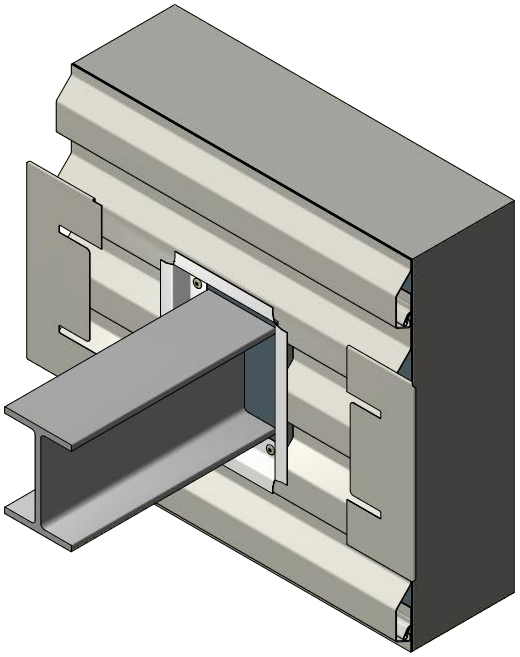

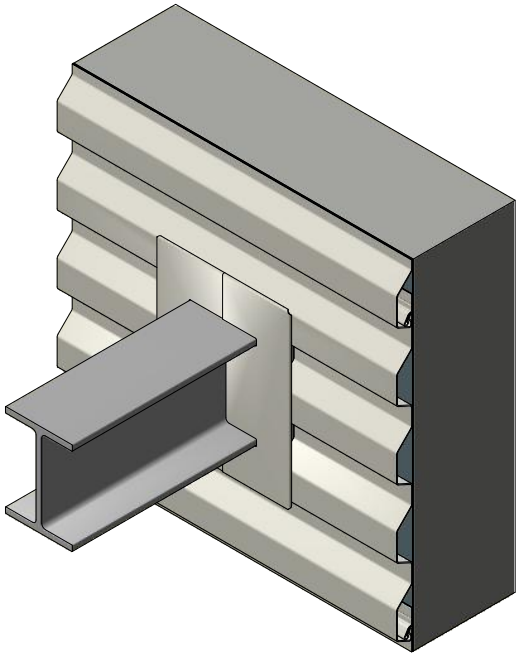

Order # _____

Base Dimensions

Horizontal: _____

Vertical: _____

For use with (Panel SKU): _____

or

Height (If specific size requested): _____

Alum: .032 ☐ .040 ☐

Steel: 24ga ☐

Color: _____

Quantity: _____

ATAS INTERNATIONAL, INC
Allentown PA
610-395-8445
Mesa AZ
480-558-7210

REV. NO.	DATE	DESCRIPTION OF REVISION	BY	APP
02	6/29/2022	Added Patent Number	KRK	
01	8/23/2021	Updated Materials	KRK	JPB

TITLE: Zee Box - Order Sheet - Retrofit Cover

DWG. NO.

MATERIAL

DR: PJR | DATE: 04-25-16

APP | DATE

SH. SIZE: A | SCALE: X:X

Patent Number: 10,439,380B2