Horizontal Panel

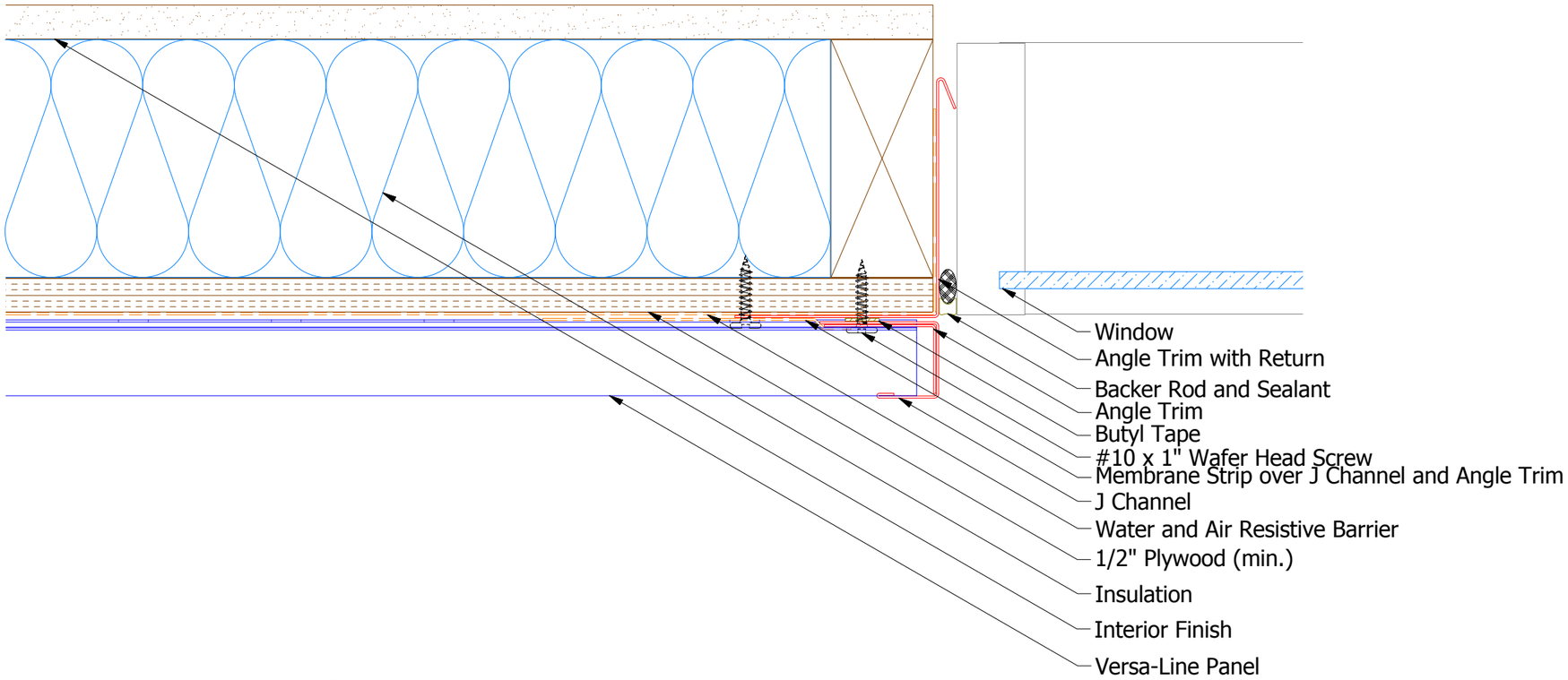

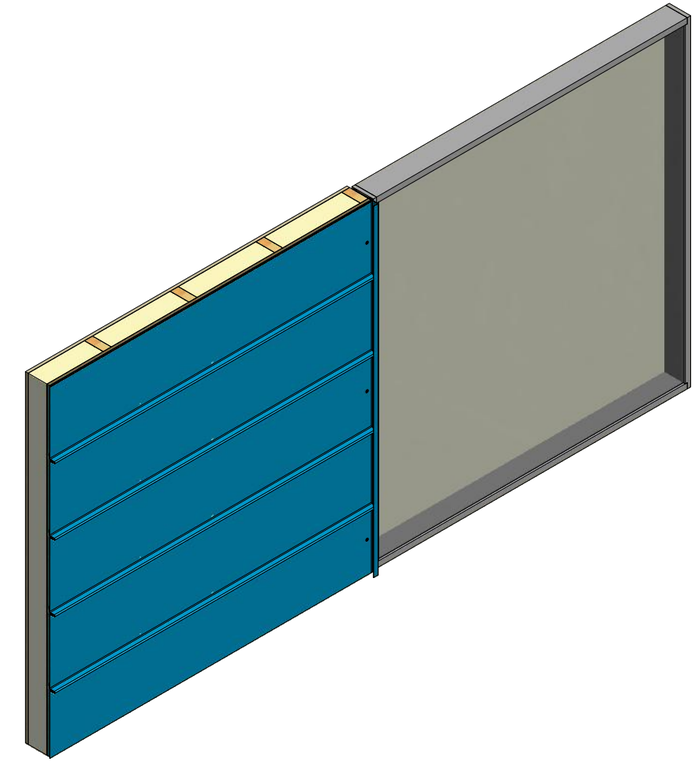

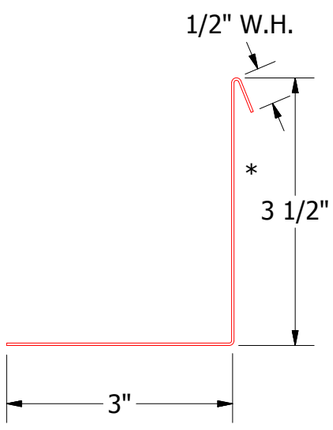

VSA683 - Angle Trim with Return

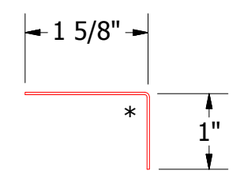

VSA680 - Angle Trim

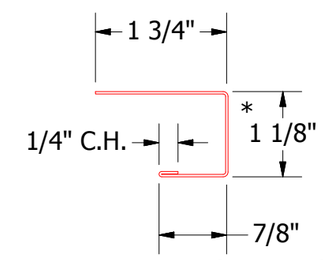

VSA118 - J Channel

ATAS INTERNATIONAL, INC
Allentown PA
610-395-8445
Mesa AZ
480-558-7210

REV. NO.	DATE	DESCRIPTION OF REVISION	BY	APP

TITLE	Versa-Line Jamb Detail		
DWG. NO.		DR DMR	DATE 11/29/2016
		APP	DATE
MATERIAL		SH. SIZE B	SCALE X:X