Horizontal Panel

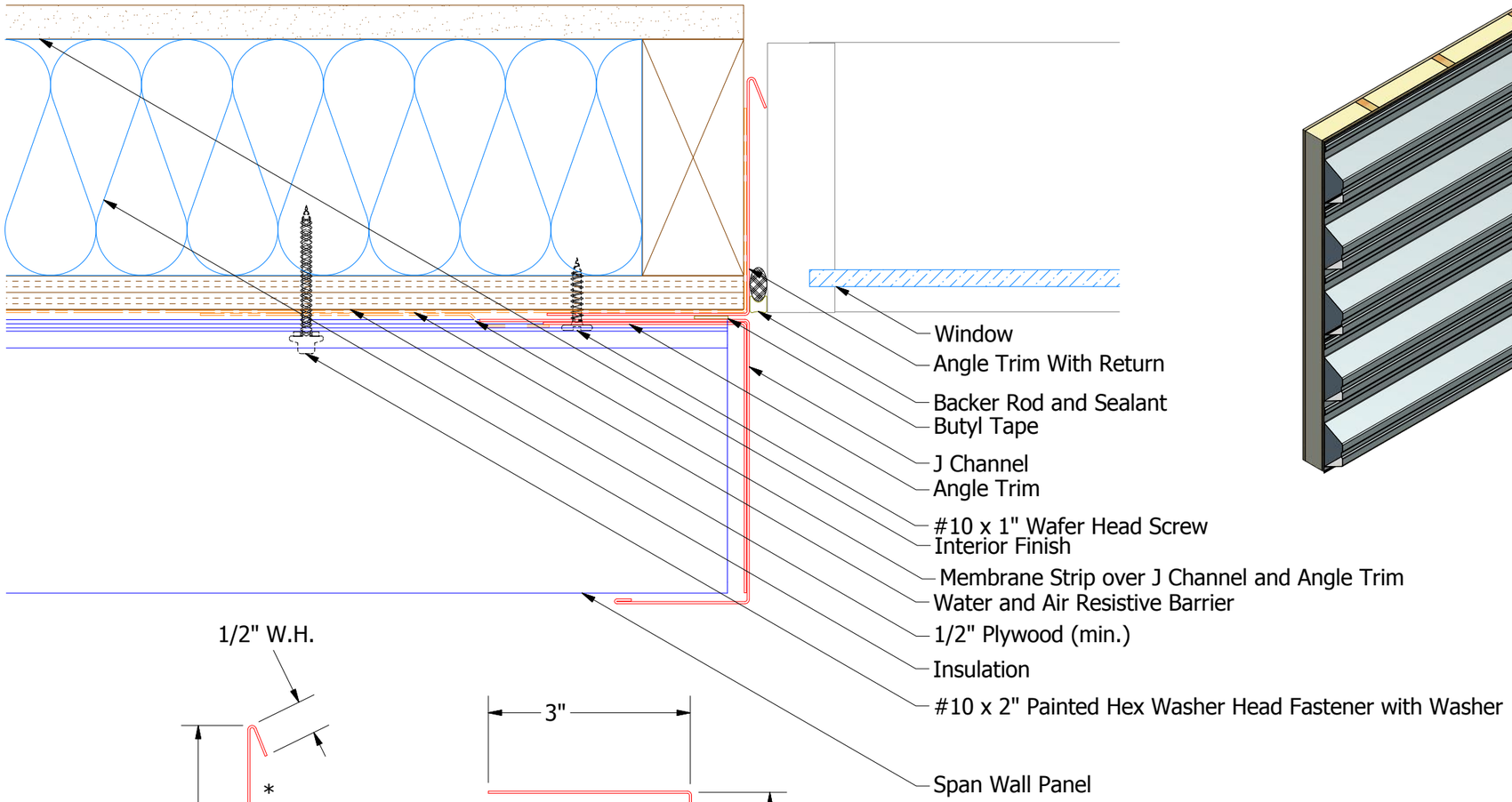

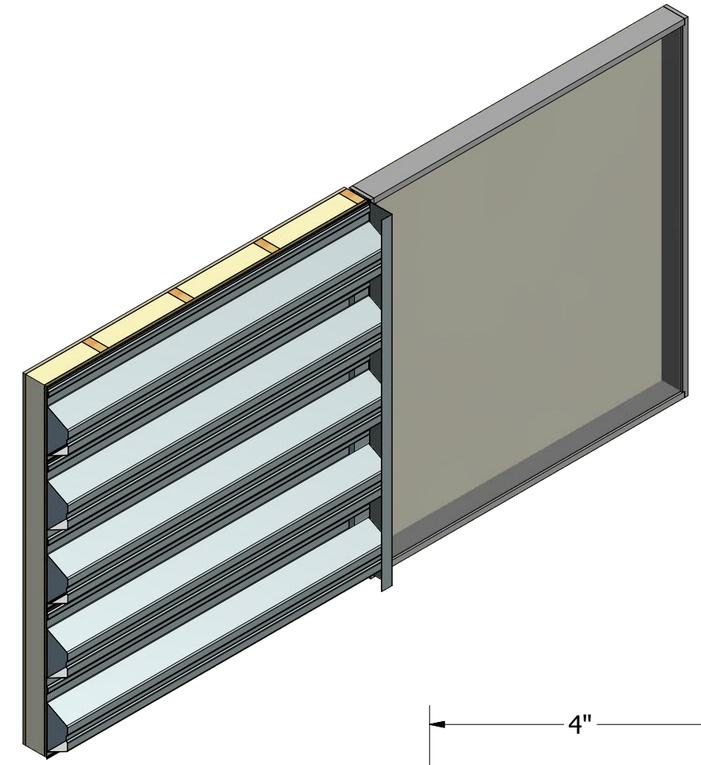

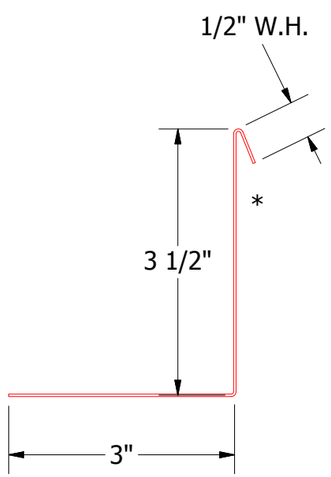

BSA681-Angle Trim with Return

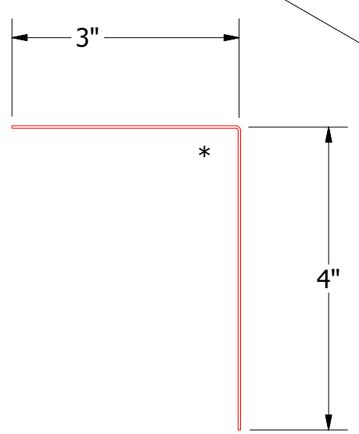

BSA680-Angle Trim

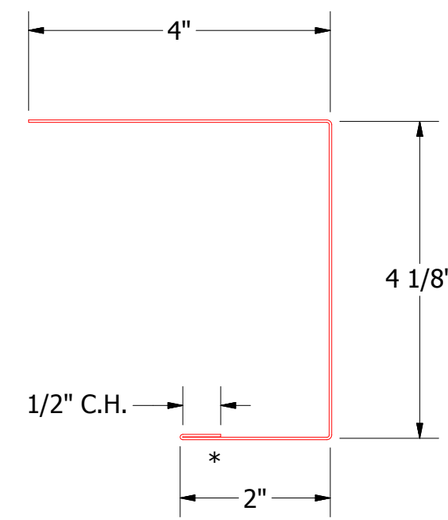

BSA140-J Channel

ATAS INTERNATIONAL, INC
Allentown PA
610-395-8445
Mesa AZ
480-558-7210

REV. NO.	DATE	DESCRIPTION OF REVISION	BY	APP

TITLE	Span Wall Jamb Detail		
DWG. NO.		DR KRK	DATE 3/2/2015
MATERIAL		APP DAS	DATE 7/26/16
		SH. SIZE B	SCALE X:X