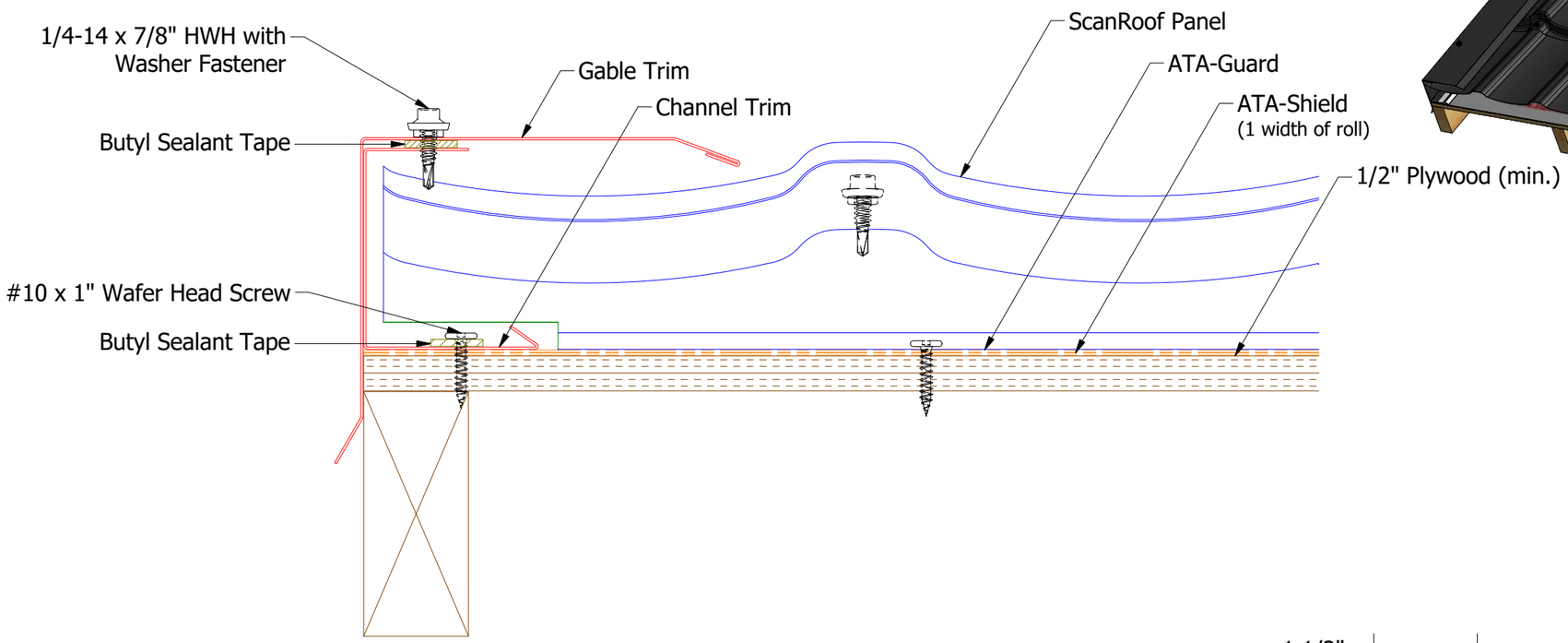

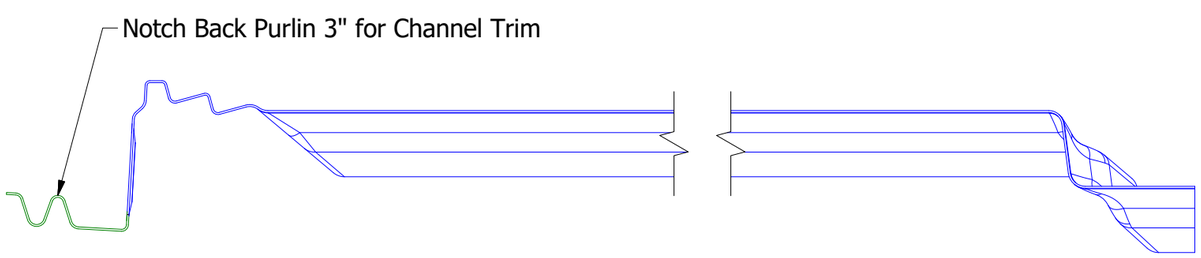

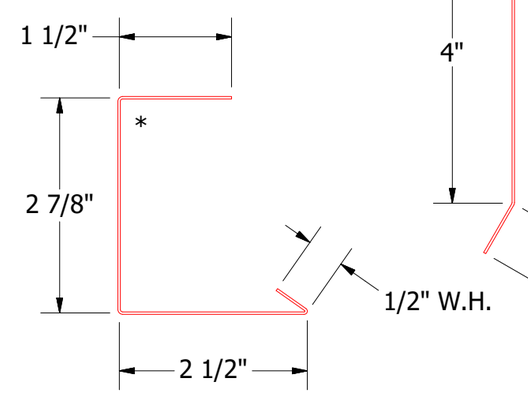

SCA270-Channel Trim

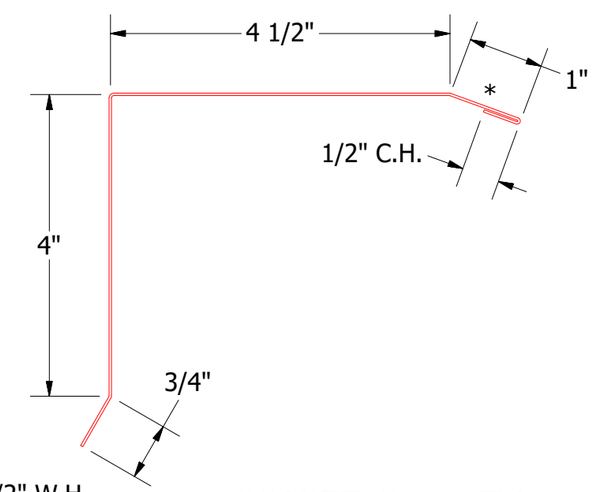

SCA277-Gable Trim

Note: * denotes color side.

REV. NO.	DATE	DESCRIPTION OF REVISION	BY	APP
02	5/18/2021	Updated Stitch Screw Description	KRK	
01	4/17/2018	Updated Substrate	KRK	

ATAS INTERNATIONAL, INC
Allentown PA
610-395-8445
Mesa AZ
480-558-7210

TITLE: ScanRoof Gable Detail

DWG. NO.		DR KRK	DATE 12/17/2014
MATERIAL		APP	DATE
		SH. SIZE B	SCALE X:X