Vertical Panel

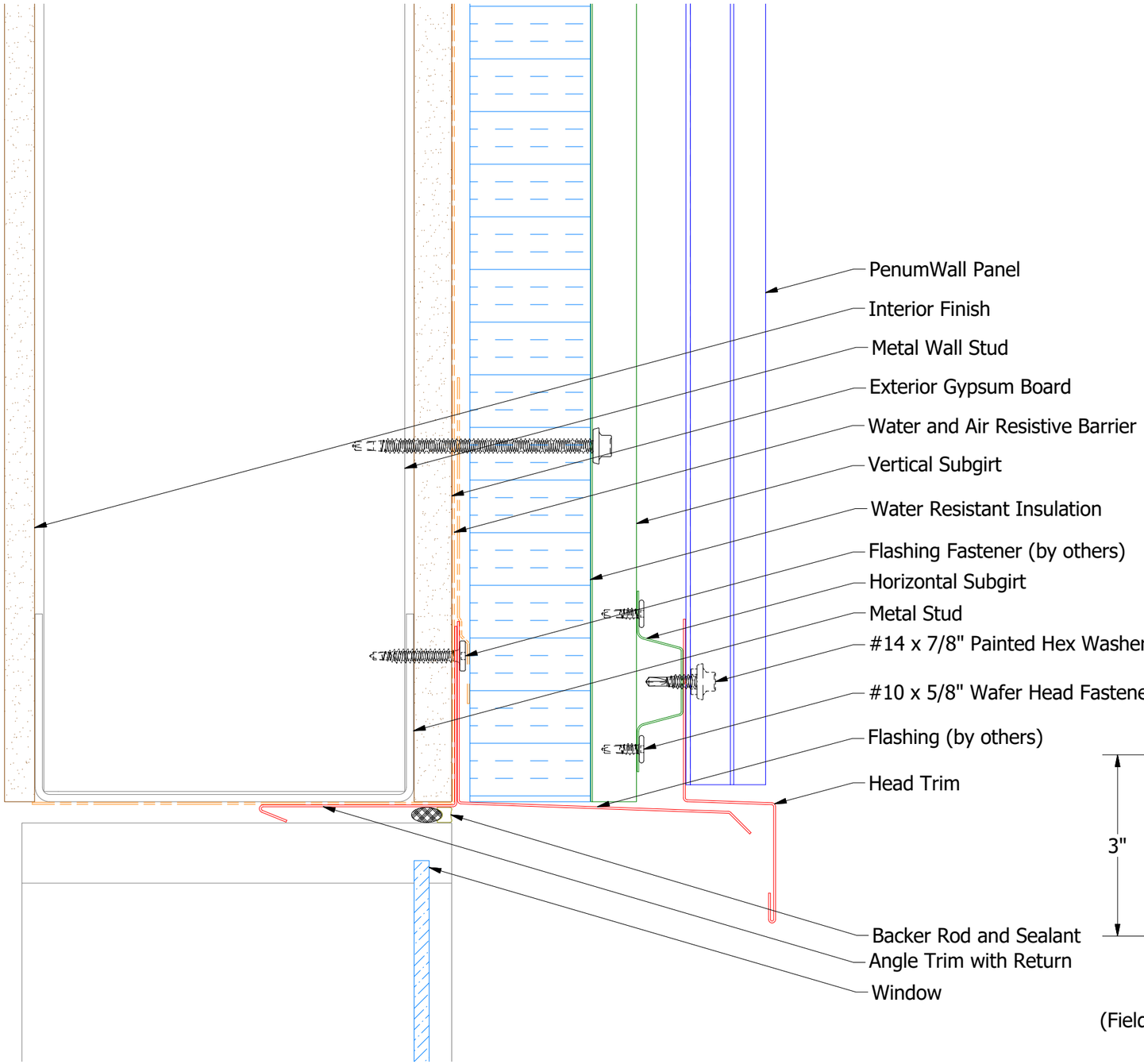

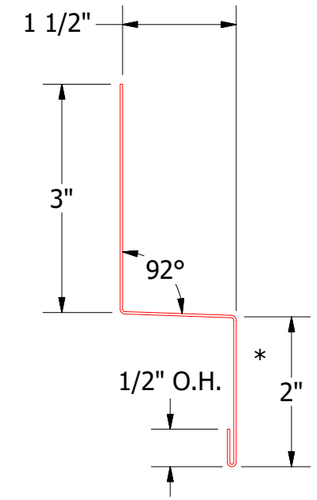

BPA550-Head Trim

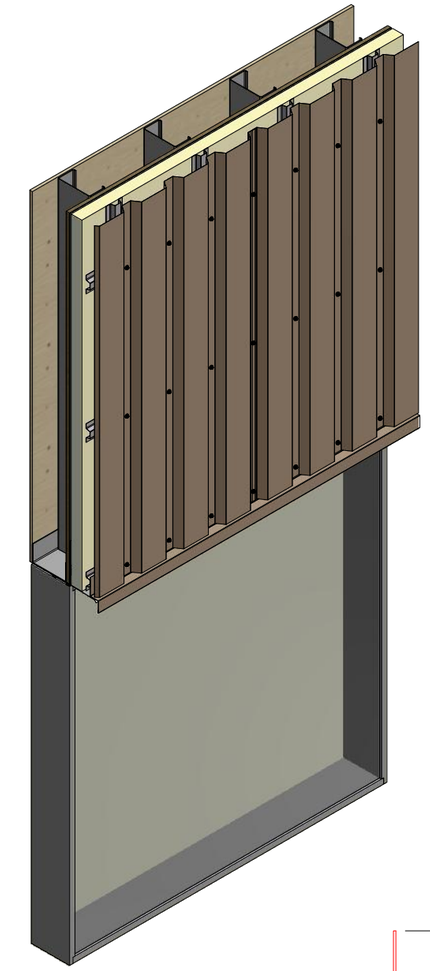

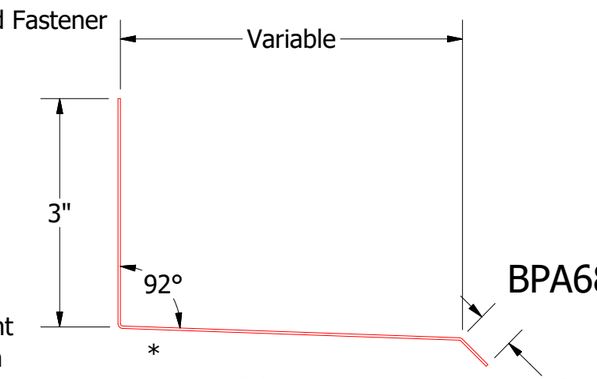

Flashing
(Field Fabricated From Color Matched Flat Stock)

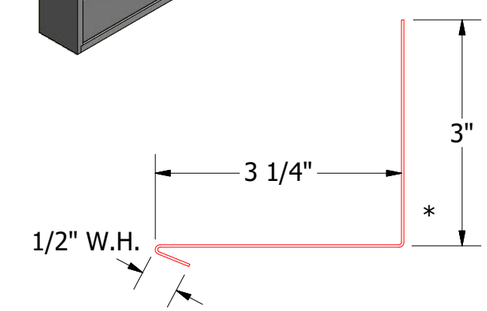

BPA683-Angle Trim with Fastener

Note: * denotes color side.

REV. NO.	DATE	DESCRIPTION OF REVISION	BY	APP
1	4/16/2021	Added color side note.	DMR	

ATAS INTERNATIONAL, INC
Allentown PA
610-395-8445
Mesa AZ
480-558-7210

TITLE: PenumWall Open Head Detail

DWG. NO.

DR: DMR | DATE: 4/20/2017

MATERIAL

APP | DATE

SH. SIZE: B | SCALE: X:X