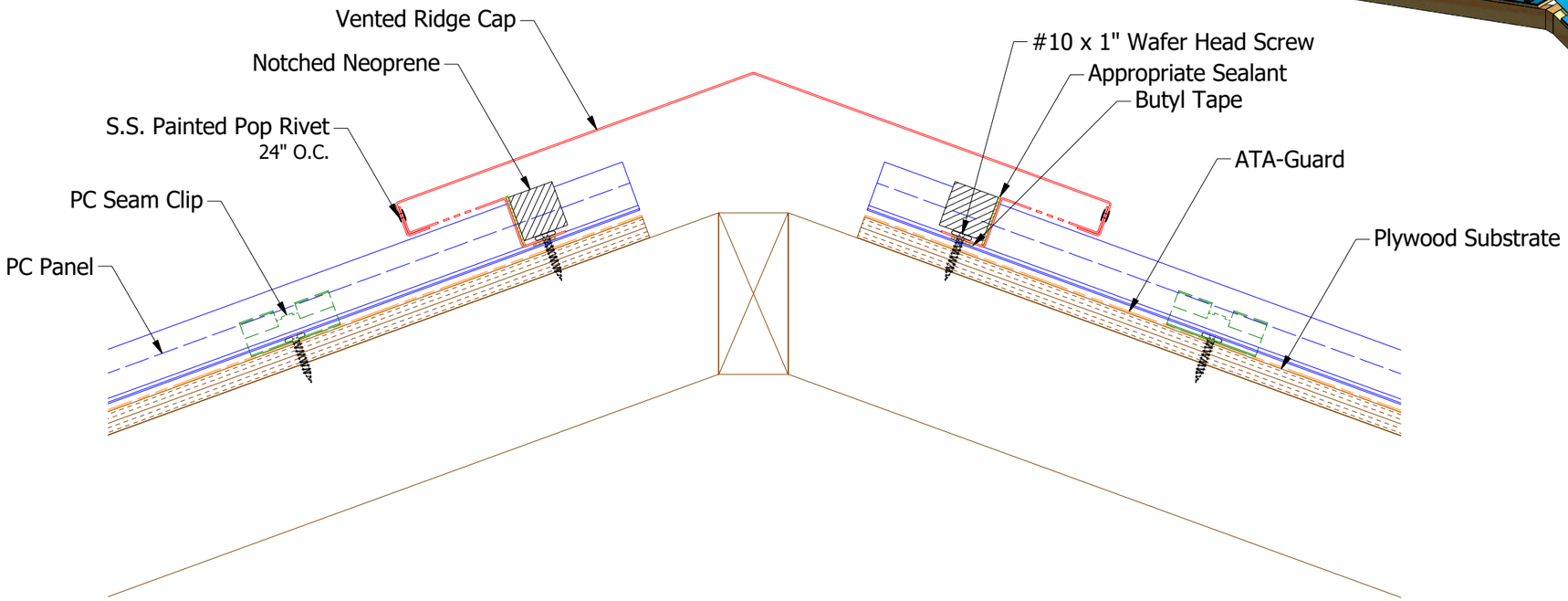

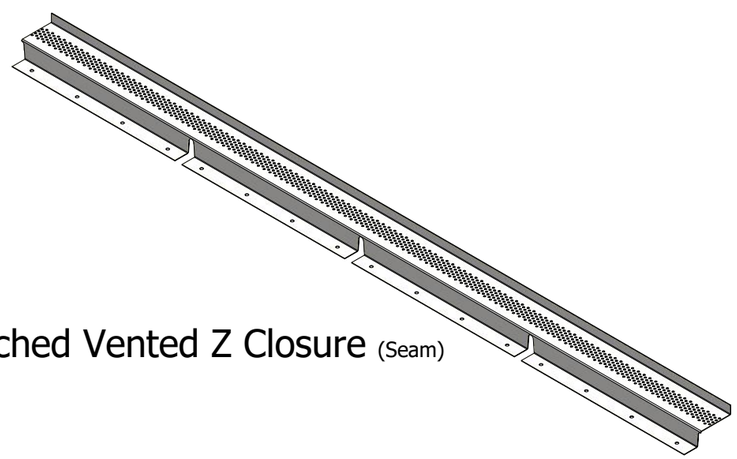

Pre Notched Vented Z Closure (Seam)

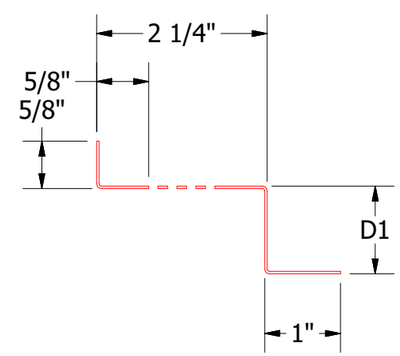

Vented Z Closure

PCA911 - 1" Seam and 1" Batten
D1=1 1/8"
PCA913 - 2" Batten
D1=2 1/8"

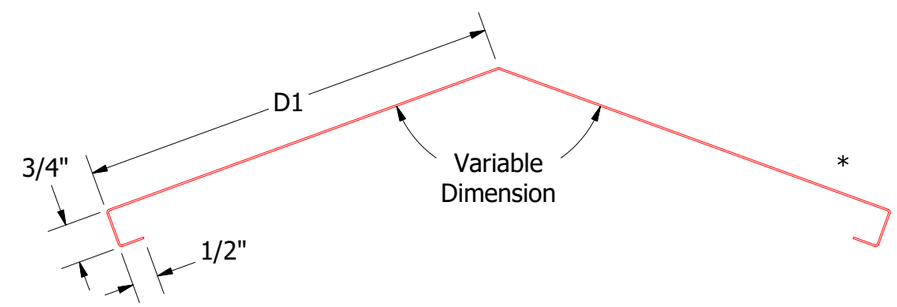

Vented Ridge Cap

PCA322-3:12 to 6:12 Slope
D1=7 1/4"
PCA324-6:12 to 9:12 Slope
D1=8 1/4"
PCA326-9:12 to 12:12 Slope
D1=9 1/4"

Note: * denotes color side.

Note: Neoprene Closures are not required if Factory Pre Notched Vented Z Closures are utilized.

REV. NO.	DATE	DESCRIPTION OF REVISION	BY	APP
1	6/5/2019	Updated Clip Information	AJZ	KRK

ATAS INTERNATIONAL, INC
Allentown PA
610-395-8445
Mesa AZ
480-558-7210

TITLE: PC Vented Ridge Detail

DWG. NO.

DR: KRK | DATE: 9/18/2014

APP | DATE

MATERIAL

SH. SIZE: B | SCALE: X:X