Horizontal Panel

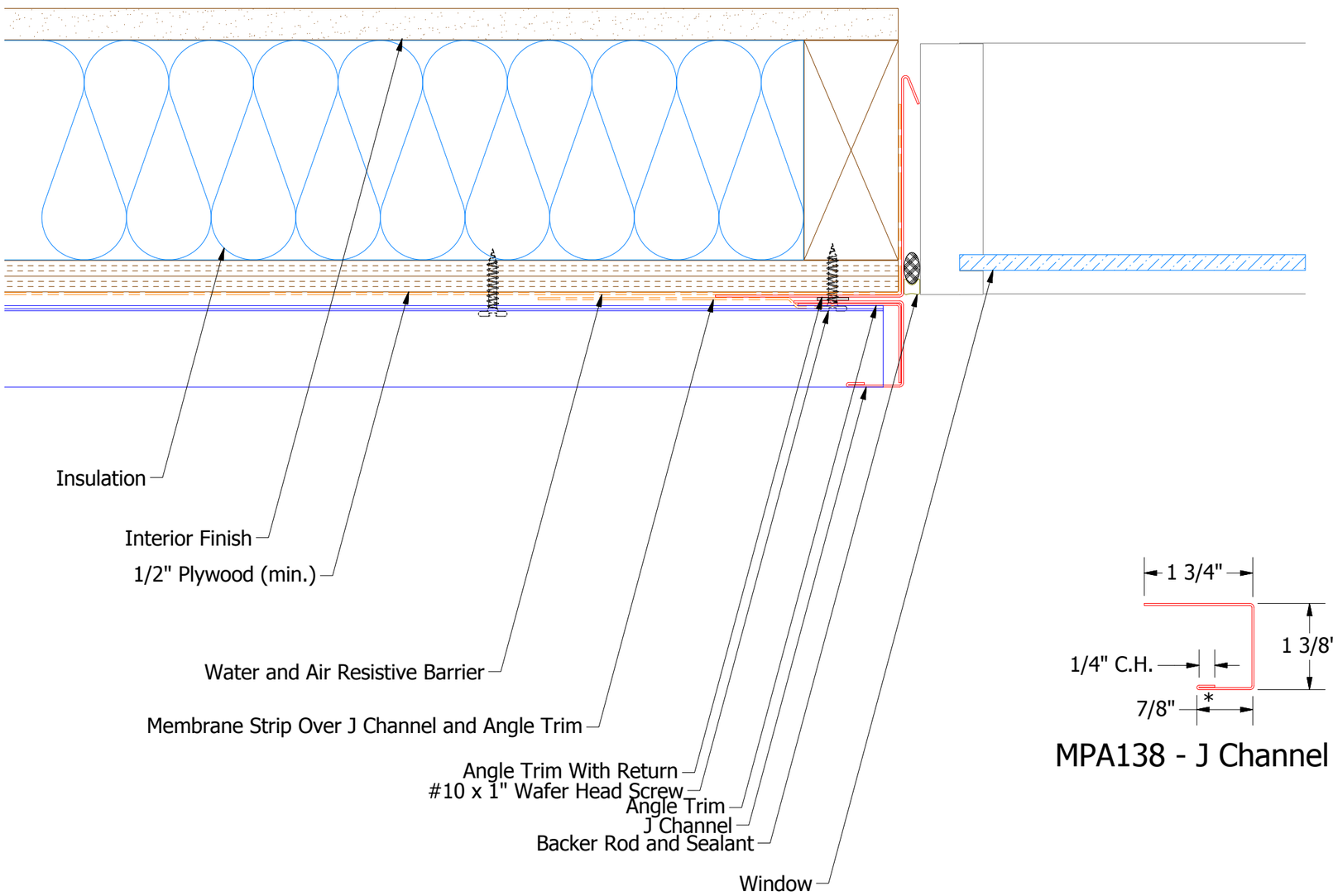

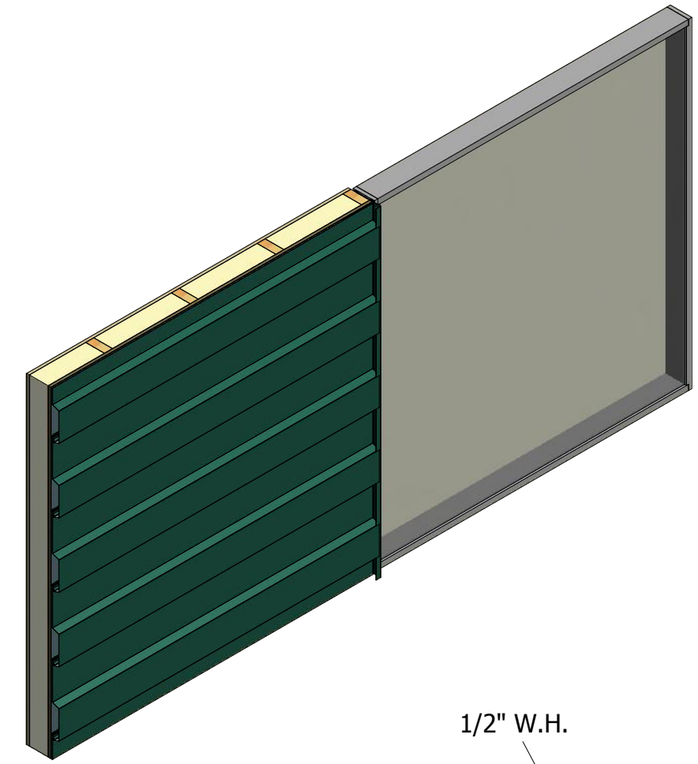

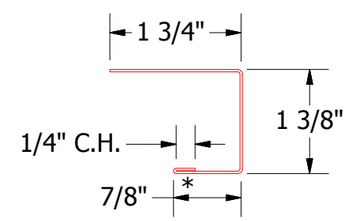

MPA138 - J Channel

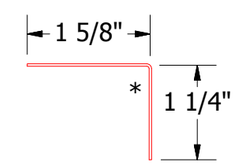

MPA680 - Angle Trim

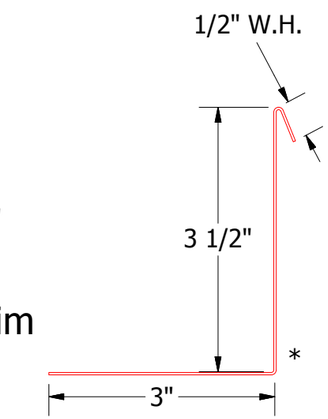

MPA683 - Angle Trim With Return

REV. NO.	DATE	DESCRIPTION OF REVISION	BY	APP

ATAS INTERNATIONAL, INC
Allentown PA
610-395-8445
Mesa AZ
480-558-7210

TITLE: MultiPurposePanel Jamb Detail

DWG. NO.		DR MBP	DATE 7/12/2016
MATERIAL		APP DAS	DATE 7/29/16
		SH. SIZE B	SCALE X:X