Vertical Panel

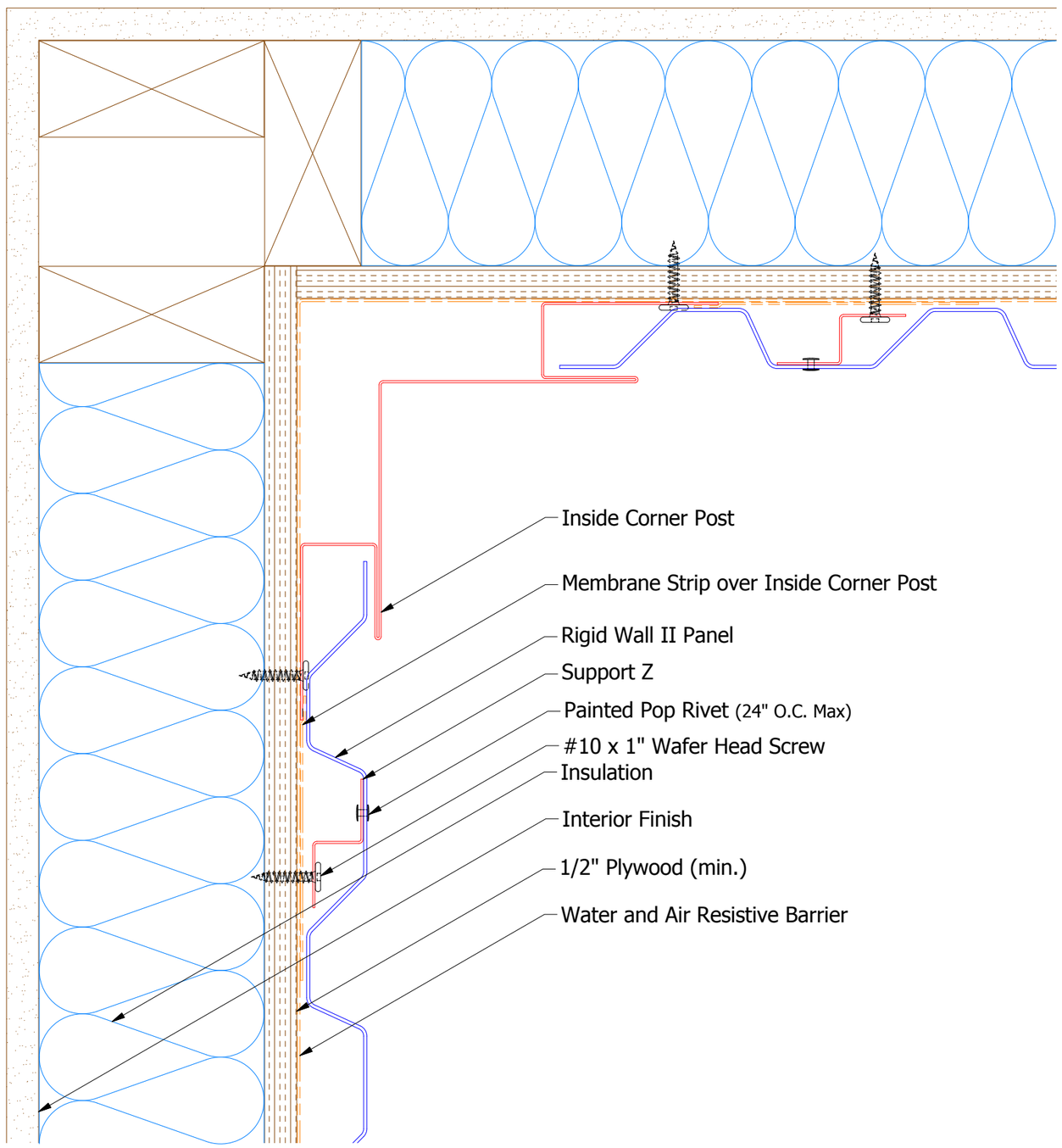

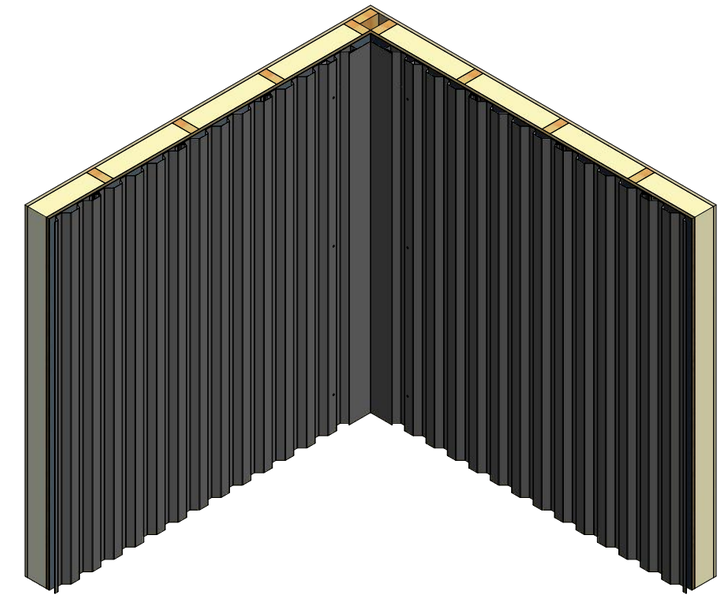

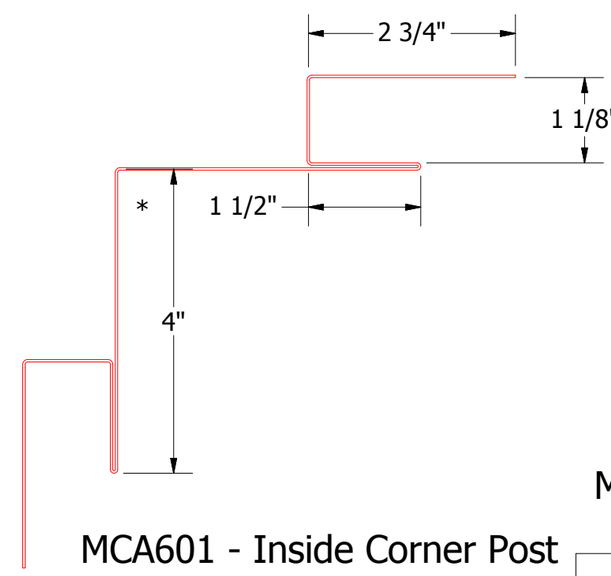

MCA601 - Inside Corner Post

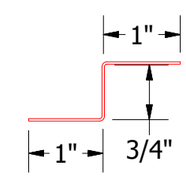

MCA681 - Support Z

ATAS INTERNATIONAL, INC
Allentown PA
610-395-8445
Mesa AZ
480-558-7210

TITLE Rigid Wall II Inside Corner Detail

REV. NO.	DATE	DESCRIPTION OF REVISION	BY	APP

DWG. NO.	DR MBP	DATE 7/11/2016	
MATERIAL	APP DAS	DATE 7/25/16	
	SH. SIZE B	SCALE X:X	