Vertical Panel

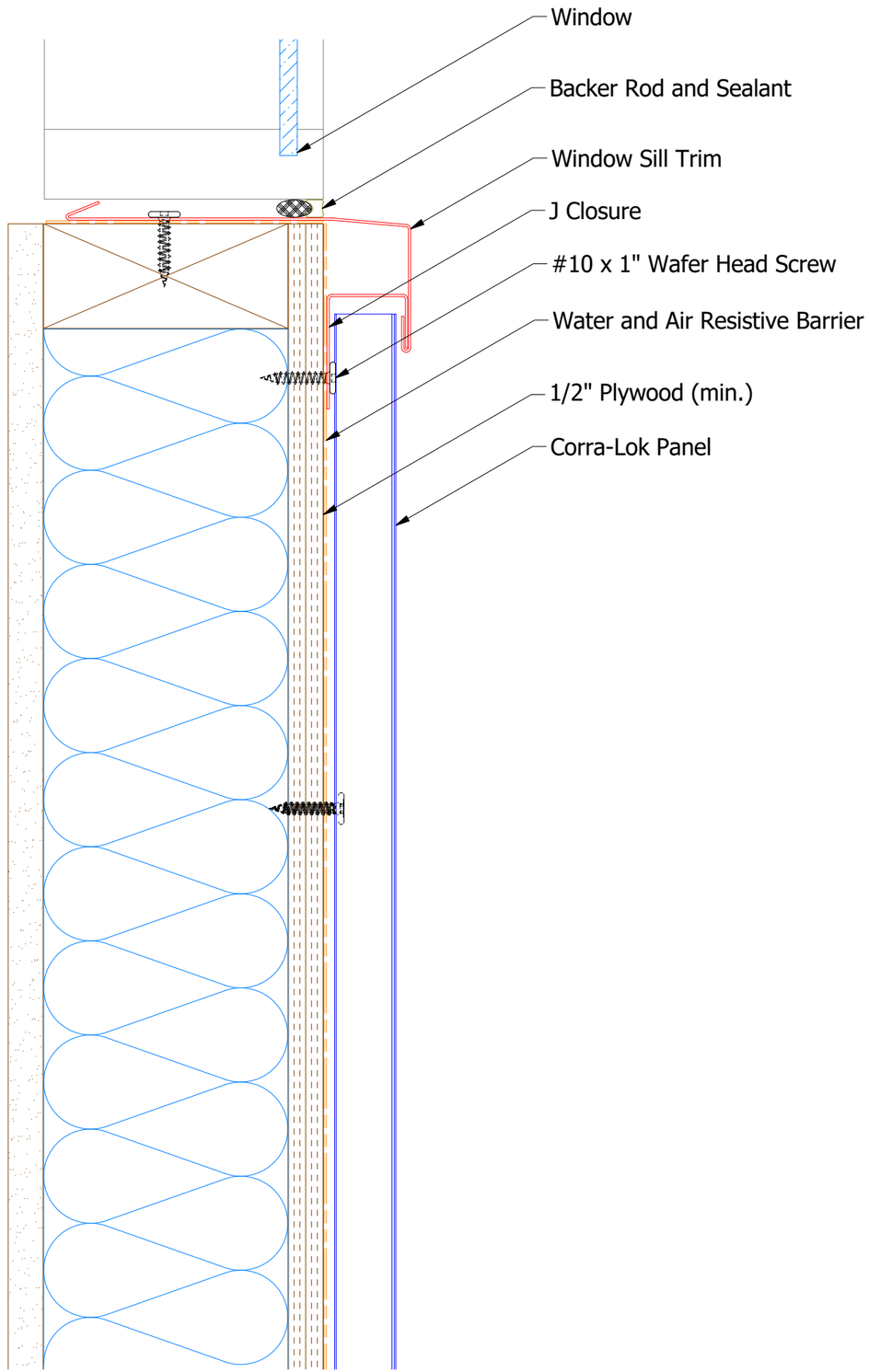

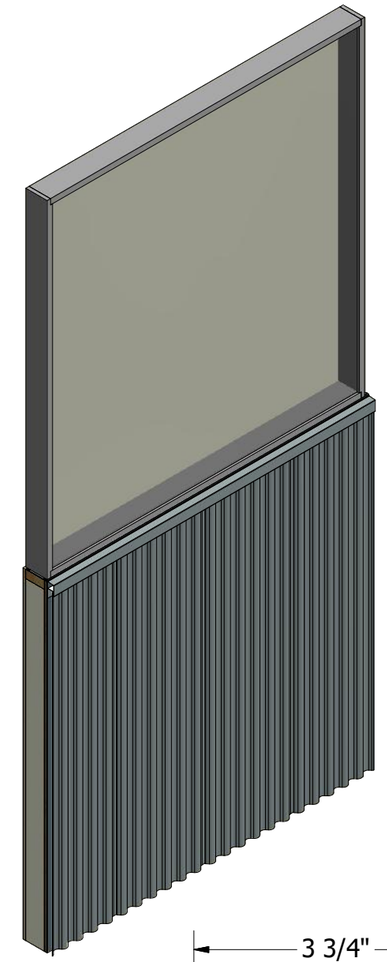

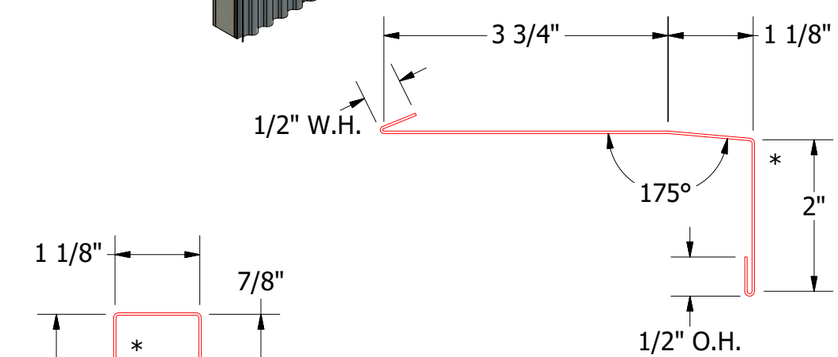

MCA670 - Window Sill Trim

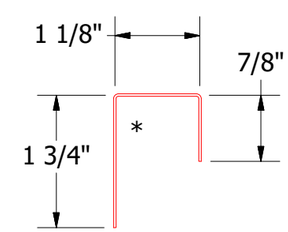

MCA270 - J Closure

Note: * denotes color side.

REV. NO.	DATE	DESCRIPTION OF REVISION	BY	APP
1	02/25/2020	Replaced Support Z with Corra-Lok Profiled Support Z	DMR	

ATAS INTERNATIONAL, INC
Allentown PA
610-395-8445
Mesa AZ
480-558-7210

TITLE: Corra-Lok Window Sill Detail

DWG. NO.

MATERIAL

DR: DMR — DATE: 6/22/2016

APP: DAS — DATE: 7/21/16

SH. SIZE: B — SCALE: X:X