Vertical Panel

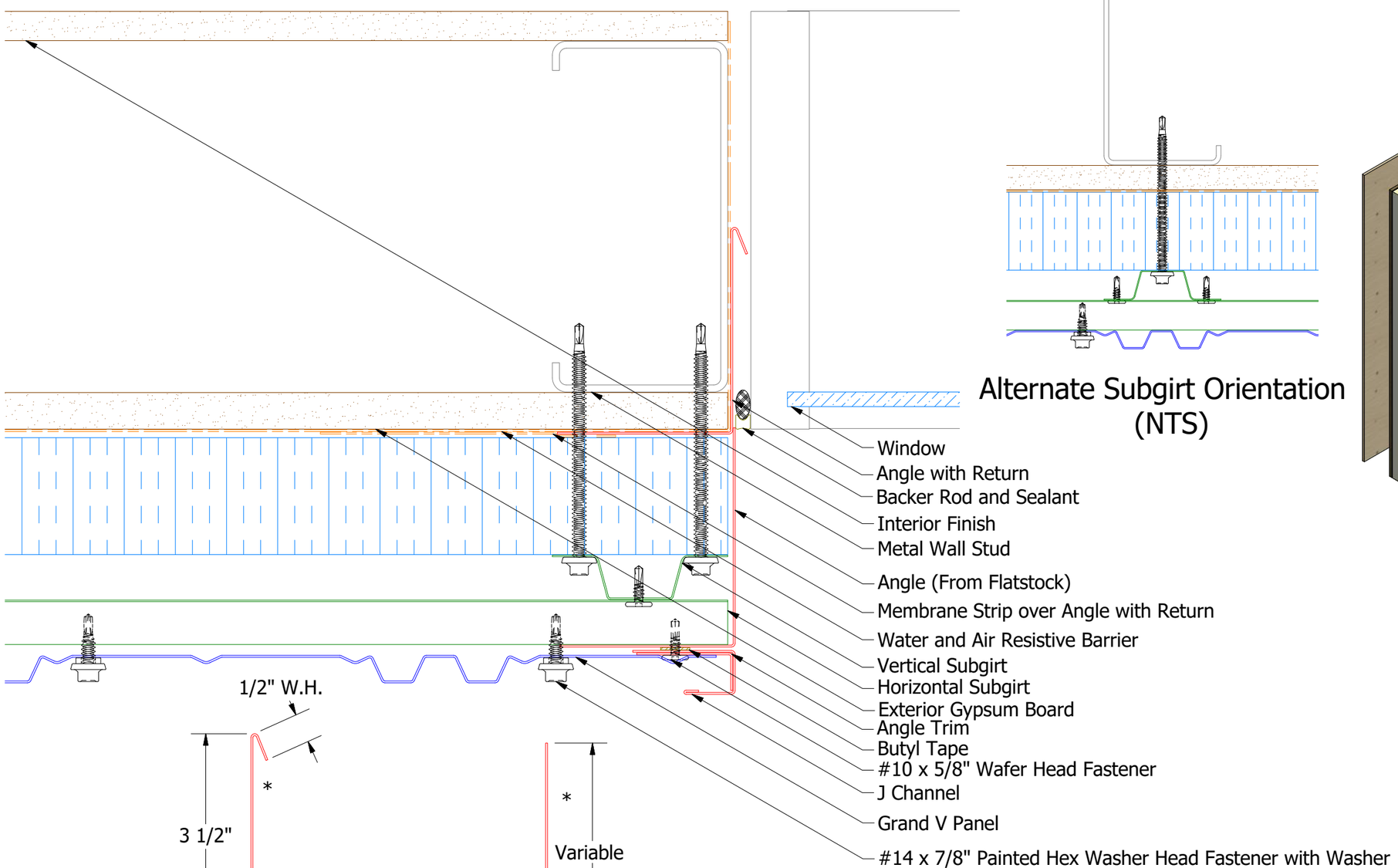

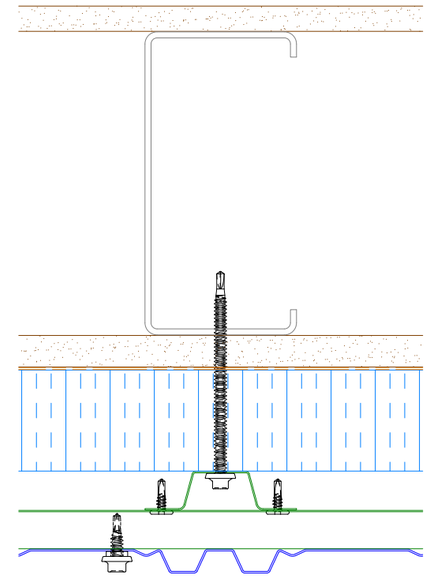

Alternate Subgirt Orientation
(NTS)

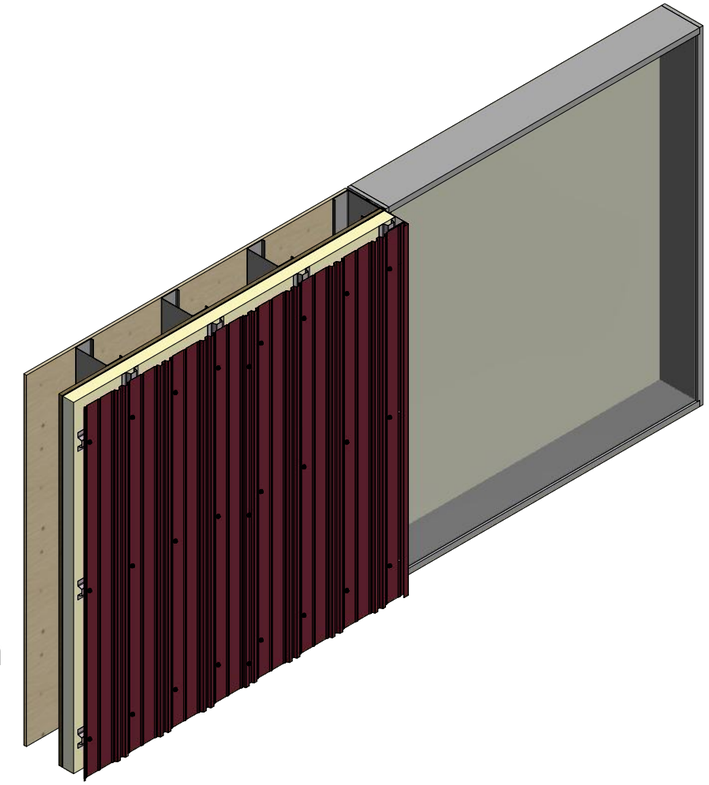

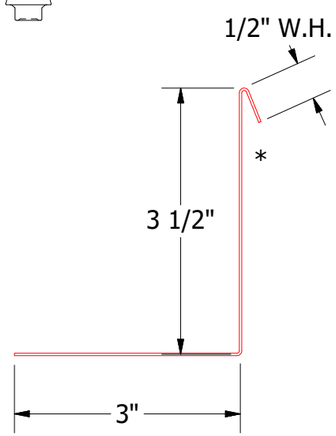

BGA683-Angle with Return

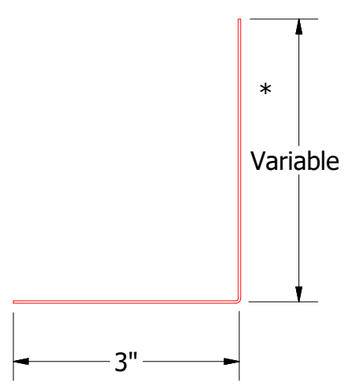

Angle

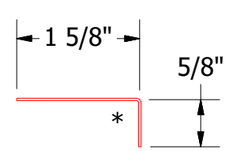

BGA680-Angle Trim

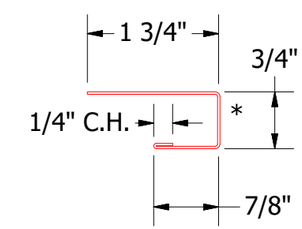

BGA034-J Channel

Note: * denotes color side.

REV. NO.	DATE	DESCRIPTION OF REVISION	BY	APP

ATAS INTERNATIONAL, INC
Allentown PA
610-395-8445
Mesa AZ
480-558-7210

TITLE Grand V Panel Open Jamb Detail

DWG. NO.		DR DMR	DATE 9/28/2016
		APP	DATE
MATERIAL		SH. SIZE B	SCALE X:X