Horizontal Panel

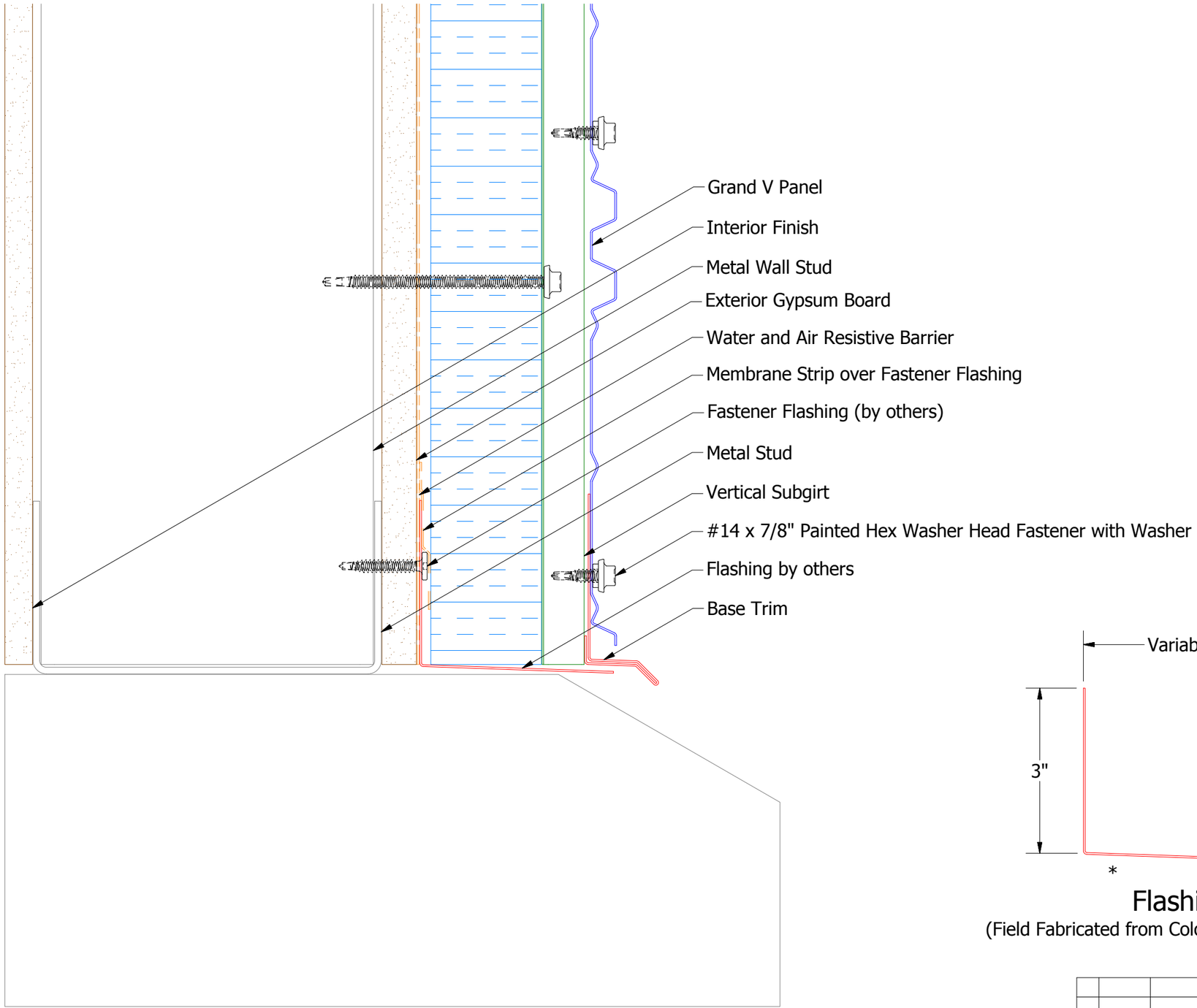

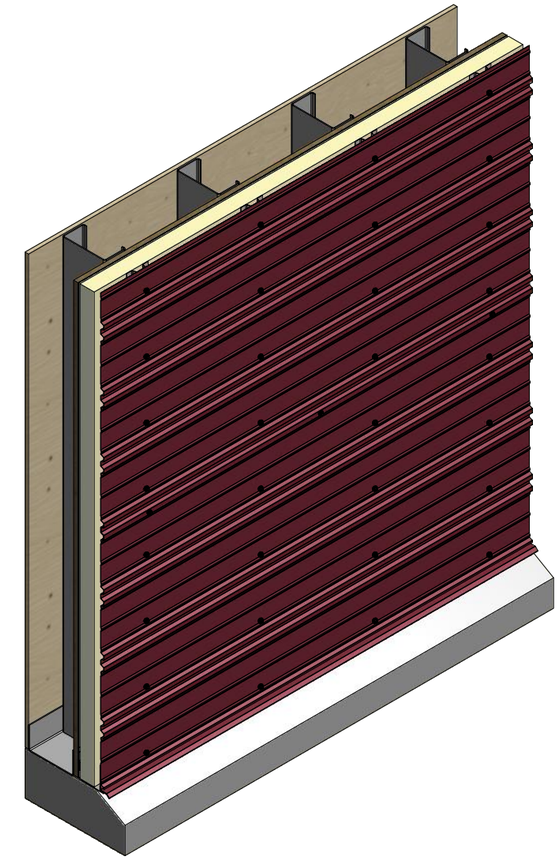

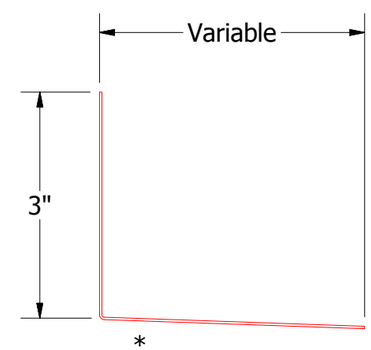

Flashing

(Field Fabricated from Color Matched Flat Sheet)

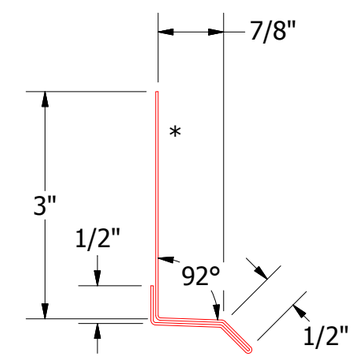

BGA661-Base Trim

ATAS INTERNATIONAL, INC
Allentown PA
610-395-8445
Mesa AZ
480-558-7210

REV. NO.	DATE	DESCRIPTION OF REVISION	BY	APP

TITLE Grand V Panel Open Base Detail			
DWG. NO.	DR DMR	DATE 9/19/2016	
	APP	DATE	
MATERIAL	SH. SIZE B	SCALE X:X	