Vertical Panel

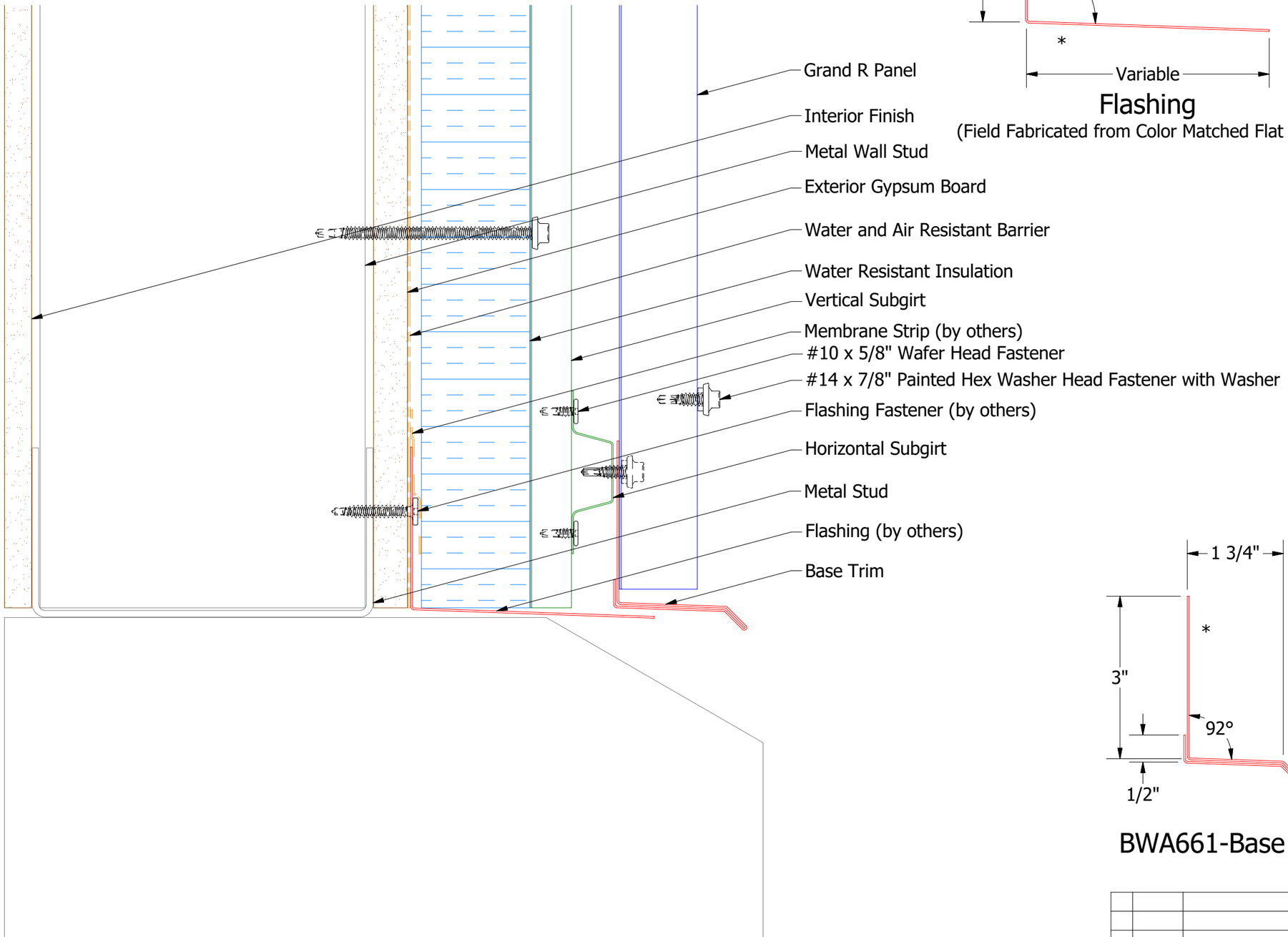

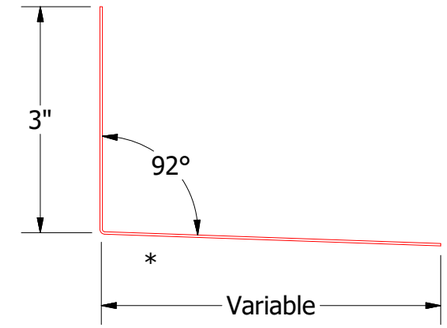

Flashing

(Field Fabricated from Color Matched Flat Stock)

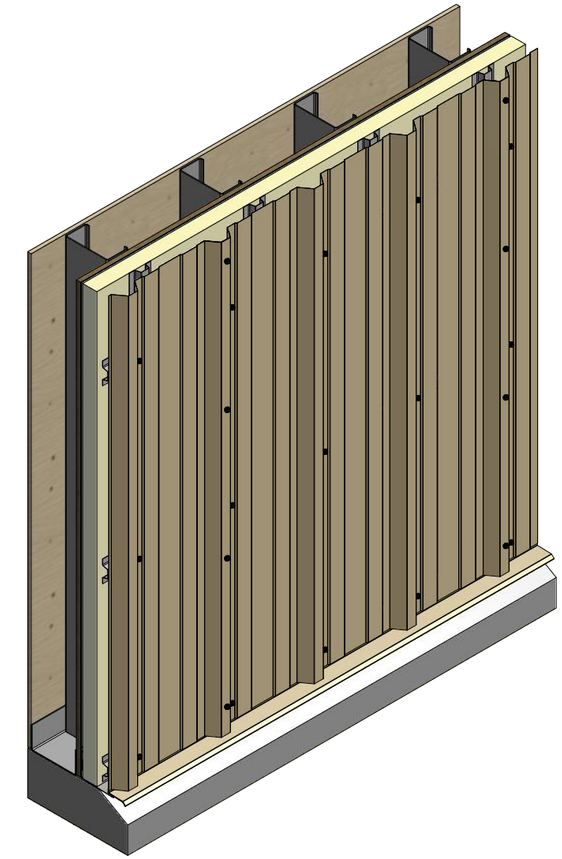

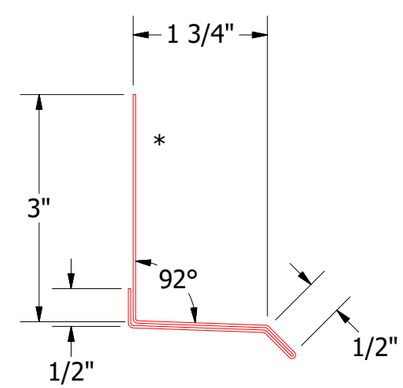

BWA661-Base Trim

ATAS INTERNATIONAL, INC
Allentown PA
610-395-8445
Mesa AZ
480-558-7210

REV. NO.	DATE	DESCRIPTION OF REVISION	BY	APP

TITLE	Grand R Open Base Detail		
DWG. NO.		DR DMR	DATE 8/11/2016
		APP	DATE
MATERIAL		SH. SIZE B	SCALE X:X