BOM per 12'	
Component	Quantity
Fascia Cover	1
6" Splice	1
22 GA Continuous Spring Cleat	1
24 GA Continuous Cant	1
3" Leveling Angle	1
1 1/2" Ring Shank Nail	36

Dimensions	
Coverage (C)	Height (H)
2-1/2"	6"
4"	7-1/2"
5-1/2"	9"
7"	10-1/2"
8-1/2"	12"

Standard Materials	
Material	Available Gauges
Pre-Finished Steel	24 GA, 22 GA
Stainless Steel	24 GA, 22 GA
Pre-Finished Alum.	.040, .050, .063
Mill Alum.	.040, .050, .063

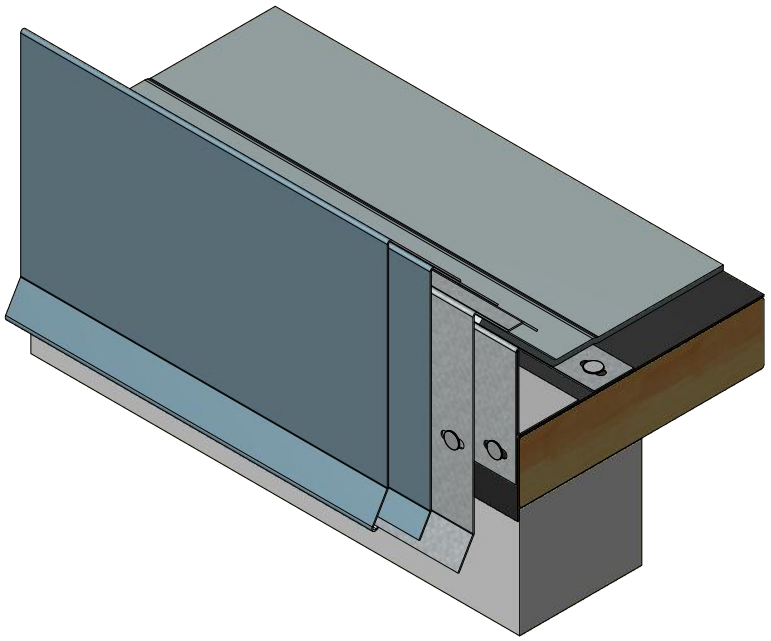

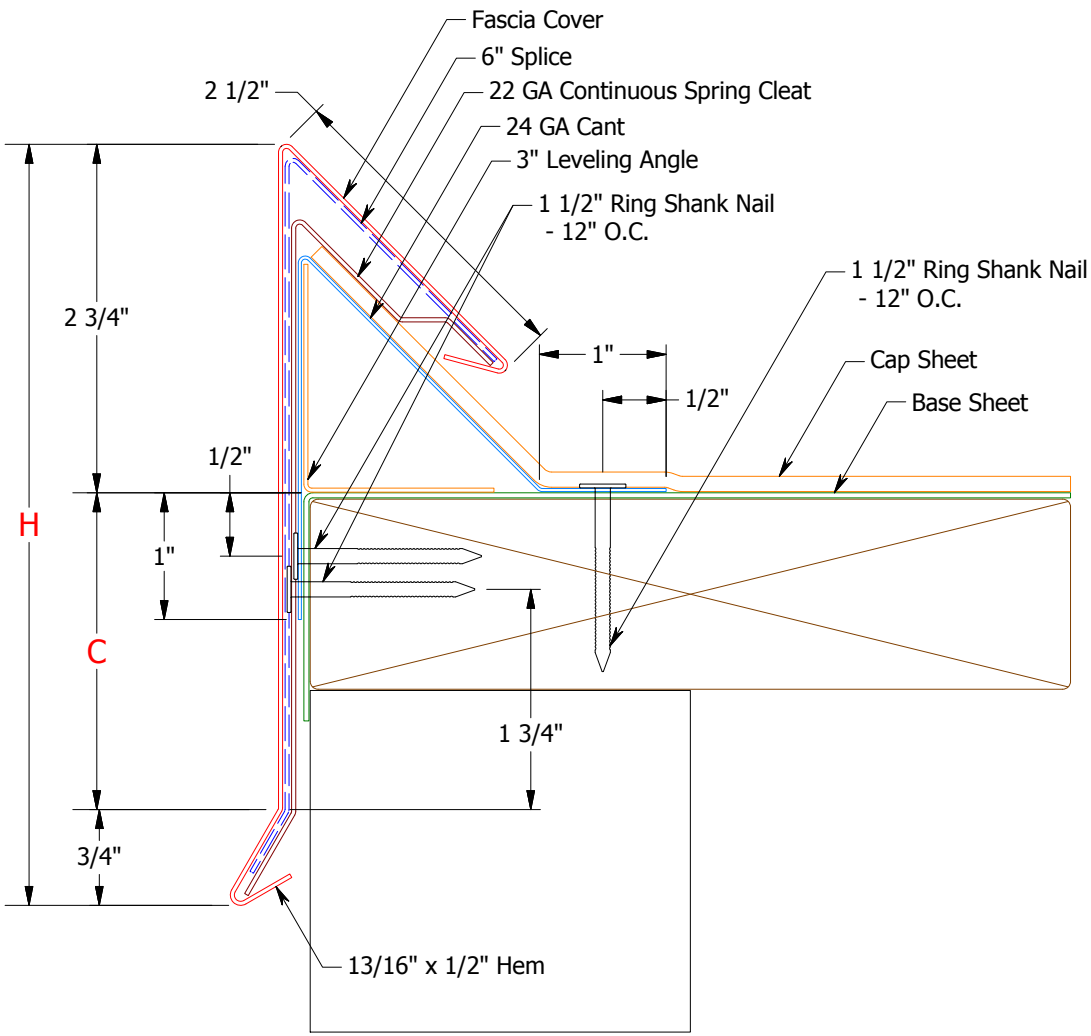

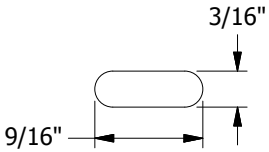

Top and Side Face Slotting

Tested per ANSI/SPRI ES-1

ATAS INTERNATIONAL, INC
Allentown PA
610-395-8445
Mesa AZ
480-558-7210

REV. NO.	DATE	DESCRIPTION OF REVISION	BY	APP

TITLE Edge Lok 3 Fascia Product Detail		
DWG. NO.	DR PJR	DATE 08-11-15
MATERIAL	APP	DATE
	SH. SIZE A	SCALE X:X