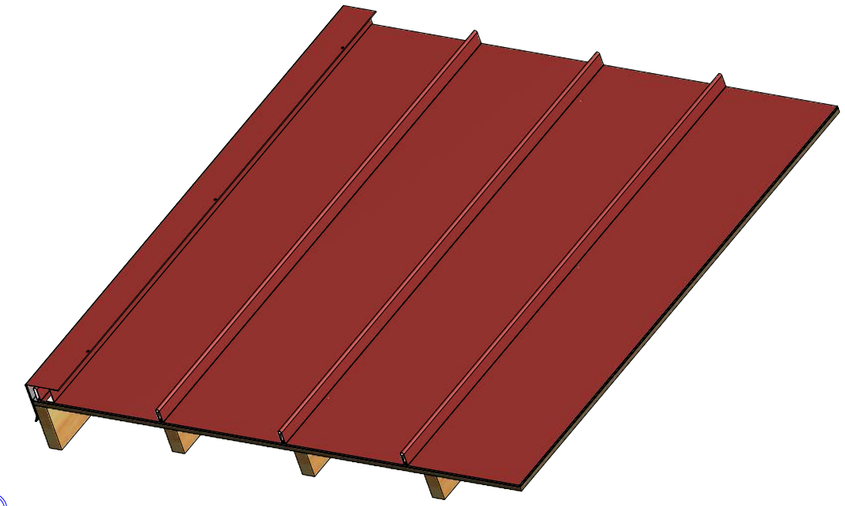

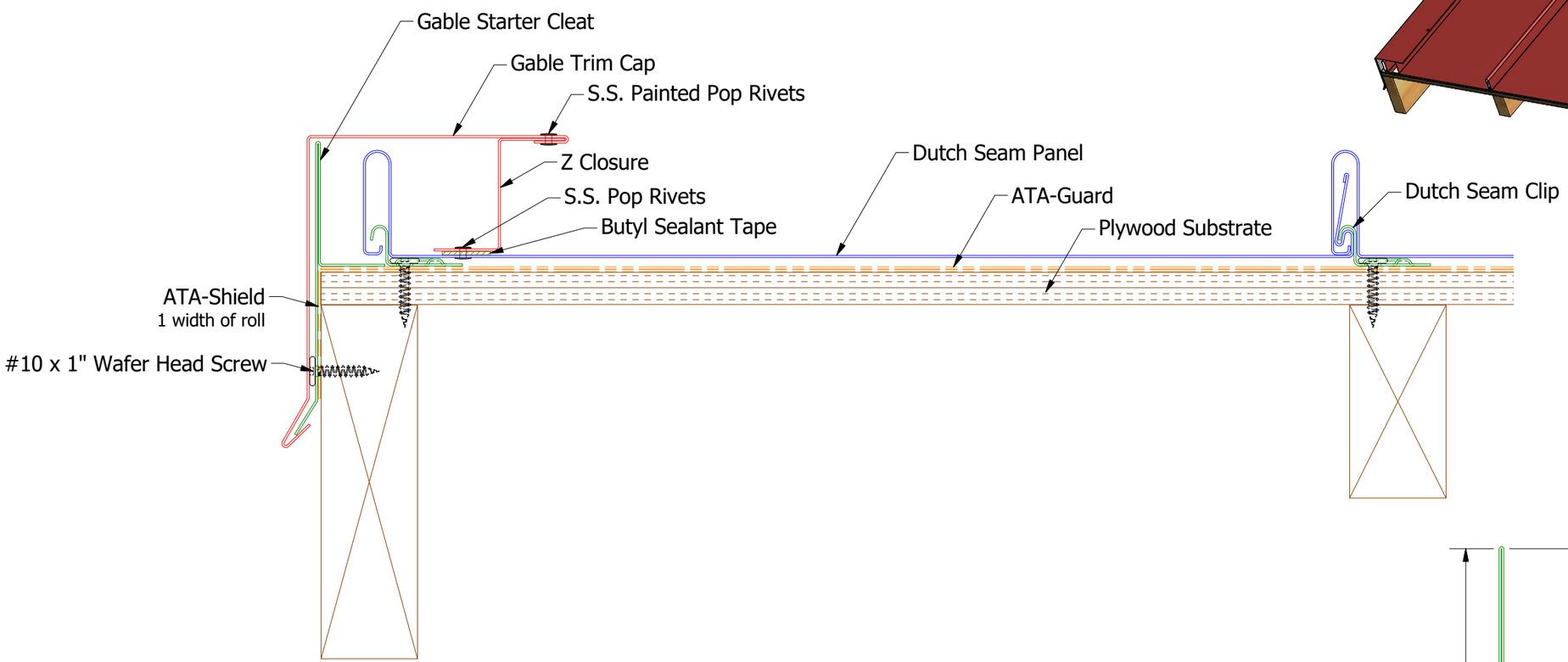

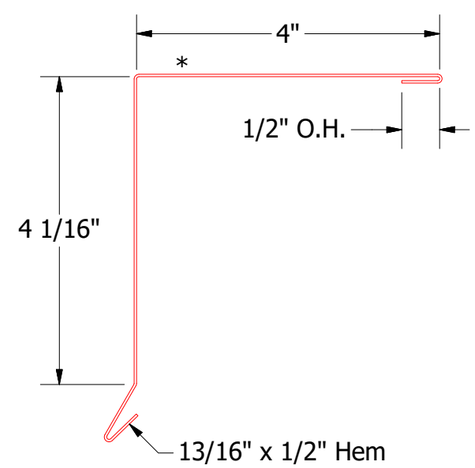

MDA210-Gable Trim Cap

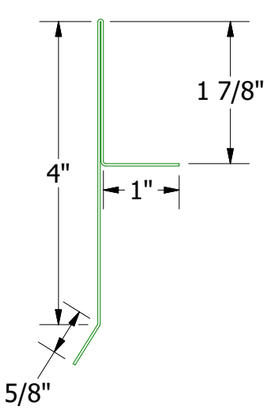

MDA211-Gable Starter Cleat

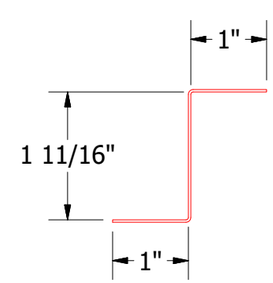

MDA910-Z Closure

Note: * denotes color side.

REV. NO.	DATE	DESCRIPTION OF REVISION	BY	APP
01	5/29/2019	Updated Clip Information	AJZ	KRK

ATAS INTERNATIONAL, INC
Allentown PA
610-395-8445
Mesa AZ
480-558-7210

TITLE Dutch Seam Starting Gable Detail

DWG. NO.

DR KRK | DATE 2/3/2015

APP | DATE

MATERIAL

SH. SIZE B | SCALE X:X