Vertical Panel

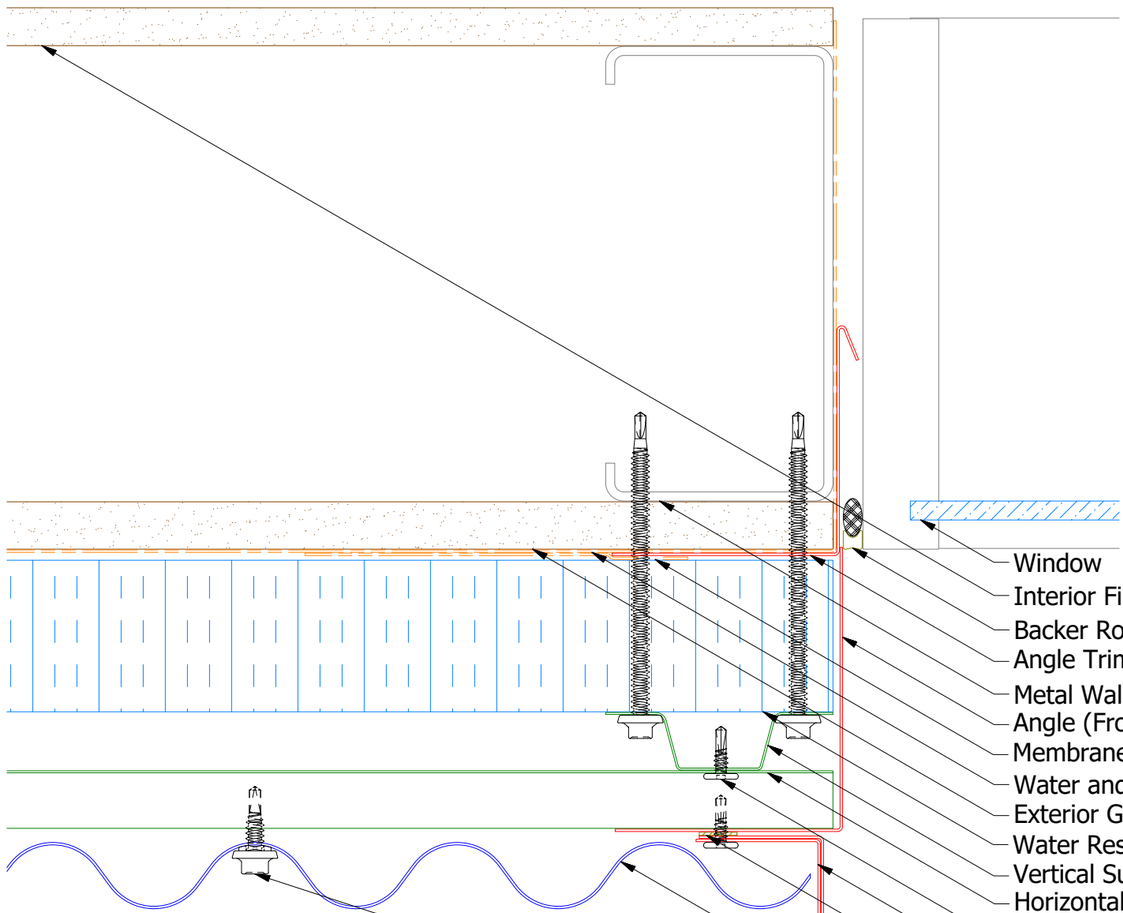

- Window
- Interior Finish
- Backer Rod and Sealant
- Angle Trim with Return
- Metal Wall Stud
- Angle (From Flatstock)
- Membrane Strip over Angle Trim with Return
- Water and Air Resistive Barrier
- Exterior Gypsum Board
- Water Resistant Insulation
- Vertical Subgirt
- Horizontal Subgirt
- #10 x 5/8" Wafer Head Fastener
- Angle Trim
- Butyl Tape
- J Channel
- Corrugated Panel
- #14 x 7/8" Painted Hex Washer Head Fastener with Washer

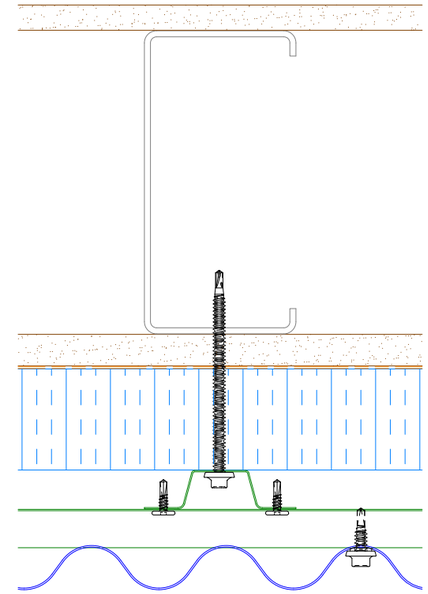

Alternate Subgirt Orientation
(NTS)

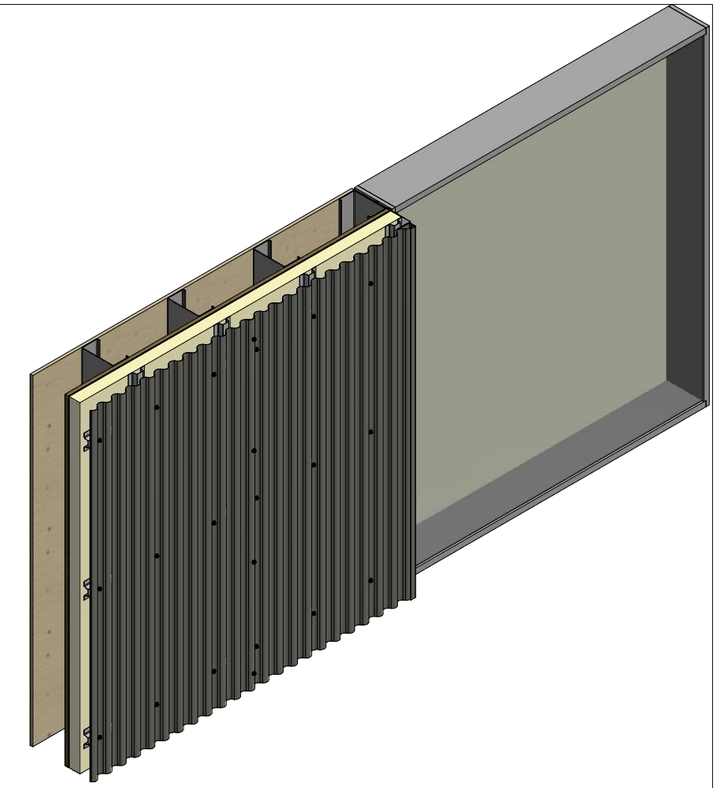

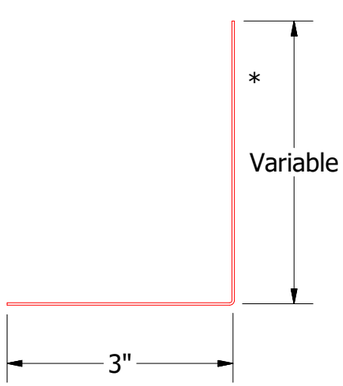

Angle

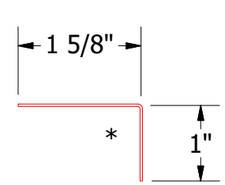

BCA680-Angle Trim

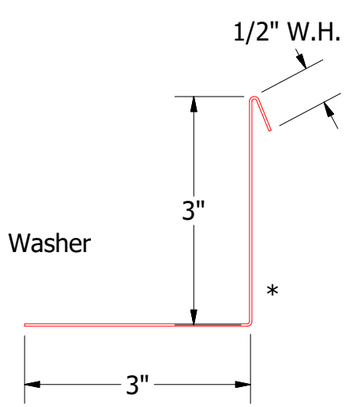

BCA683-Angle Trim with Return

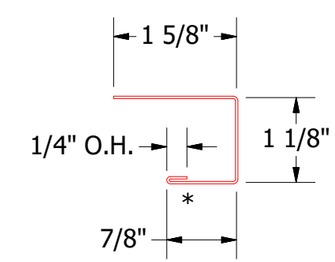

BCA118-J Channel

2 Stage Method of Weather Proofing

ATAS INTERNATIONAL, INC
Allentown PA
610-395-8445
Mesa AZ
480-558-7210

REV. NO.	DATE	DESCRIPTION OF REVISION	BY	APP

TITLE	Corrugated Panel Jamb Detail		
DWG. NO.		DR KRK	DATE 8/15/2014
		APP	DATE
MATERIAL		SH. SIZE B	SCALE X:X

Note: * denotes color side.