Horizontal Panel

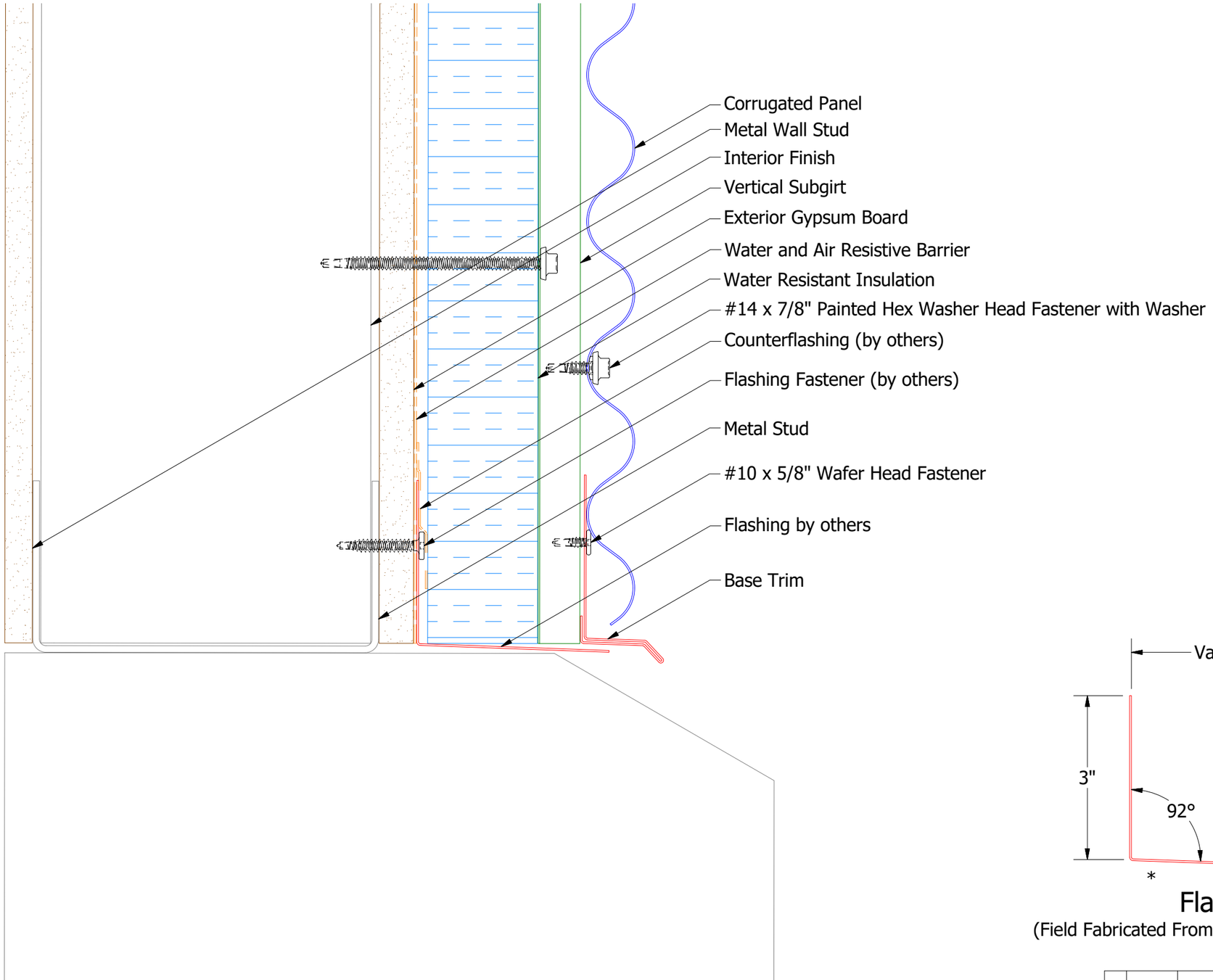

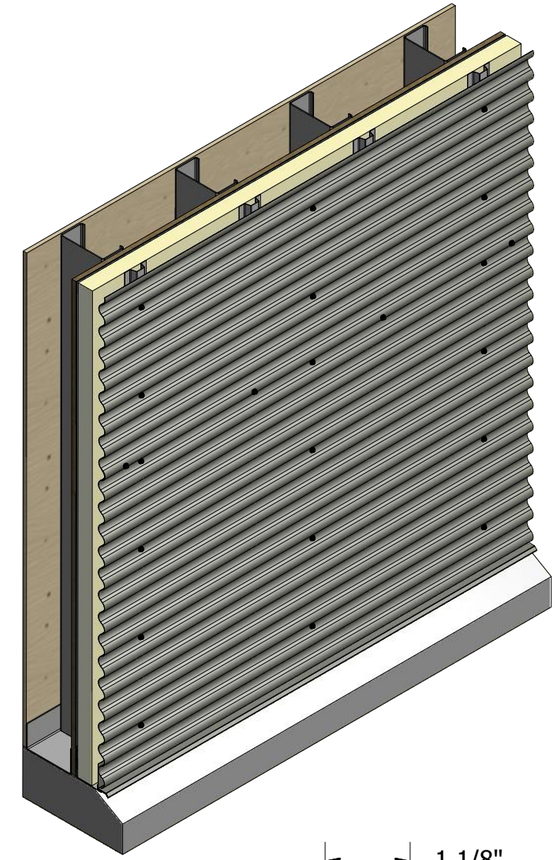

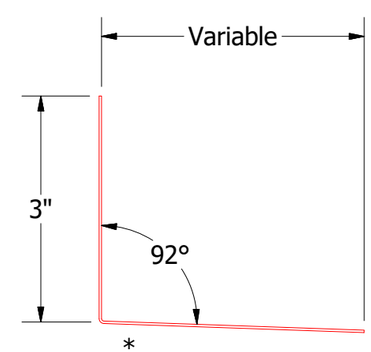

Flashing

(Field Fabricated From Color Matched Flat Stock)

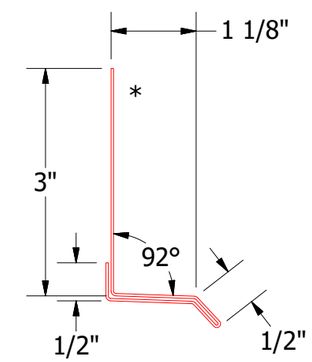

BCA661-Base Trim

2 Stage Method of Weather Proofing

ATAS INTERNATIONAL, INC
Allentown PA
610-395-8445
Mesa AZ
480-558-7210

REV. NO.	DATE	DESCRIPTION OF REVISION	BY	APP

TITLE	Corrugated Panel Base Detail		
DWG. NO.		DR KRK	DATE 8/13/2014
MATERIAL		APP	DATE
		SH. SIZE B	SCALE X:X