Vertical Panel

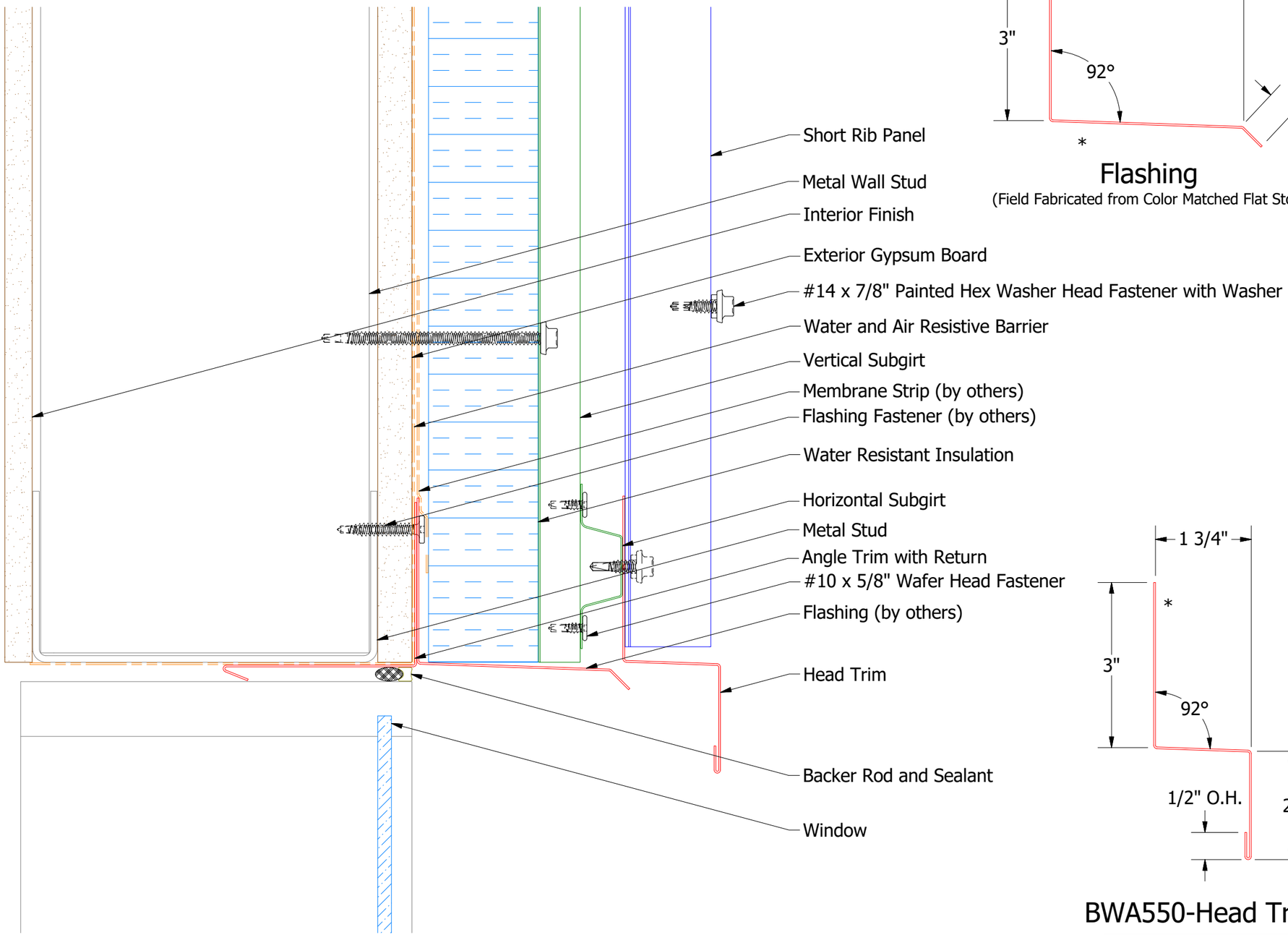

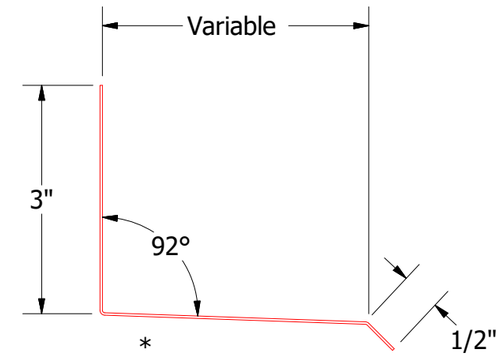

Flashing

(Field Fabricated from Color Matched Flat Stock)

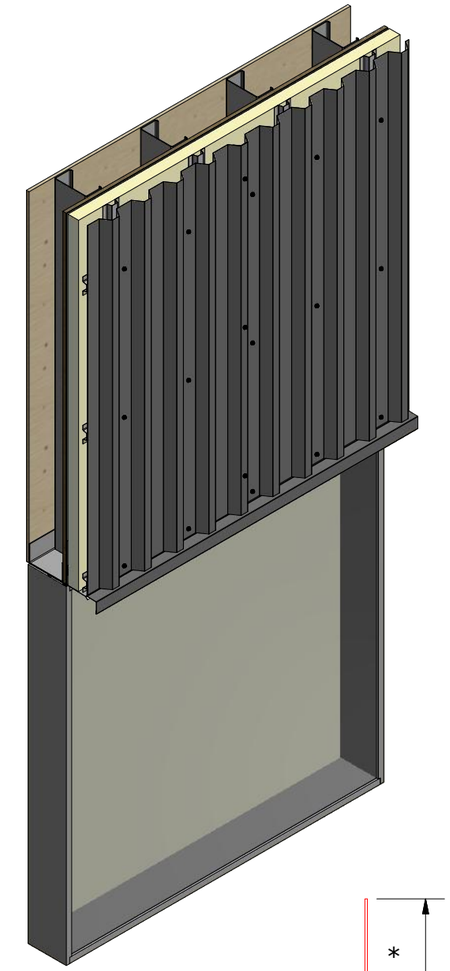

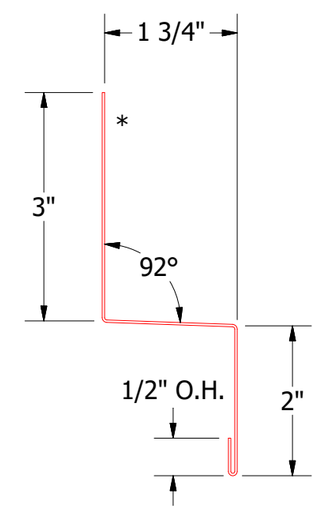

BWA550-Head Trim

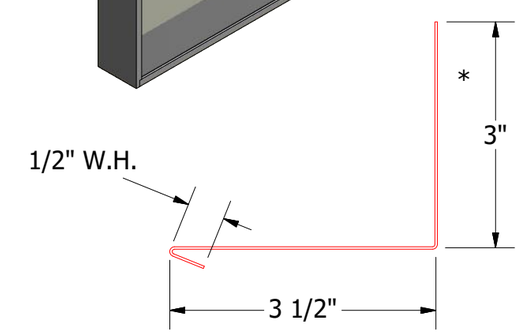

BWA683-Angle Trim with Return

(Field Fabricated from Color Matched Flat Stock)

2 Stage Method of Weather Proofing

ATAS INTERNATIONAL, INC
Allentown PA
610-395-8445
Mesa AZ
480-558-7210

REV. NO.	DATE	DESCRIPTION OF REVISION	BY	APP

TITLE	Belvedere Short Rib Head Detail		
DWG. NO.		DR KRK	DATE 6/16/2015
		APP	DATE
MATERIAL		SH. SIZE B	SCALE X:X