Horizontal Panel

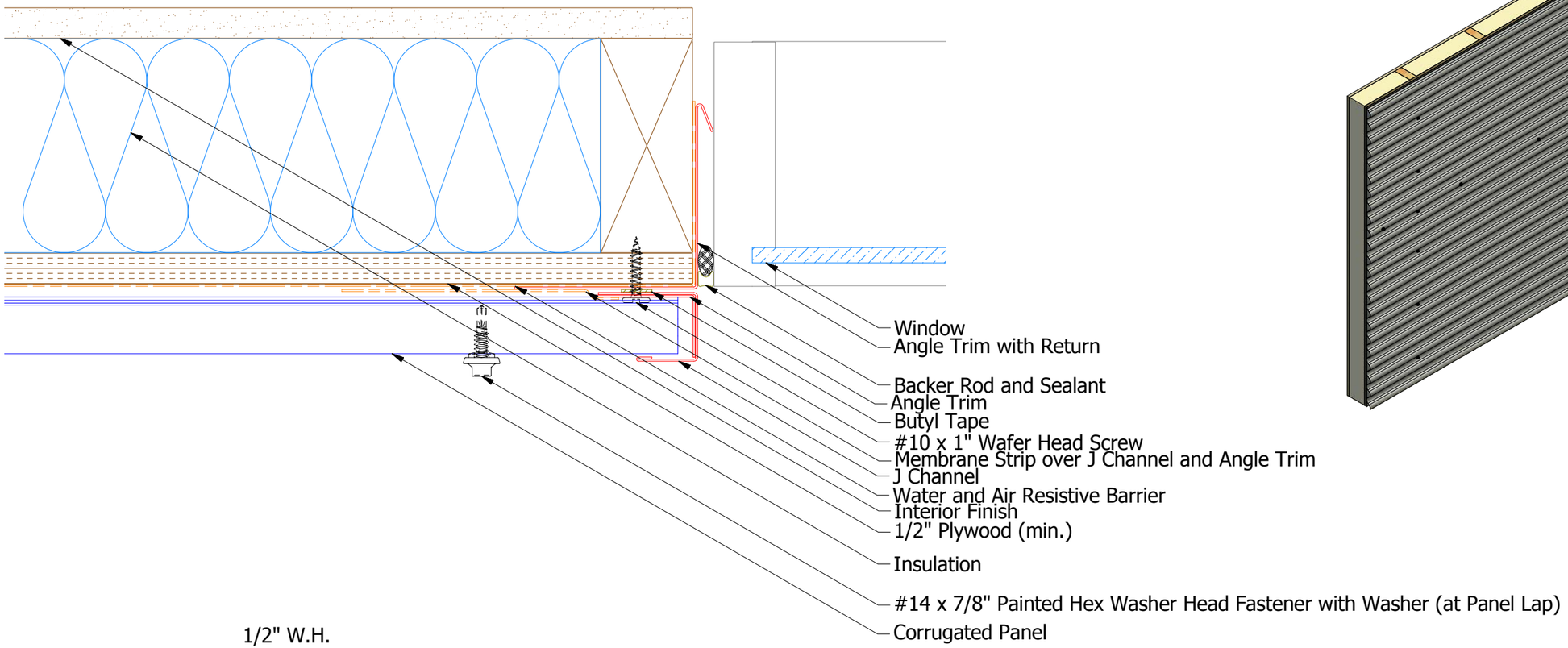

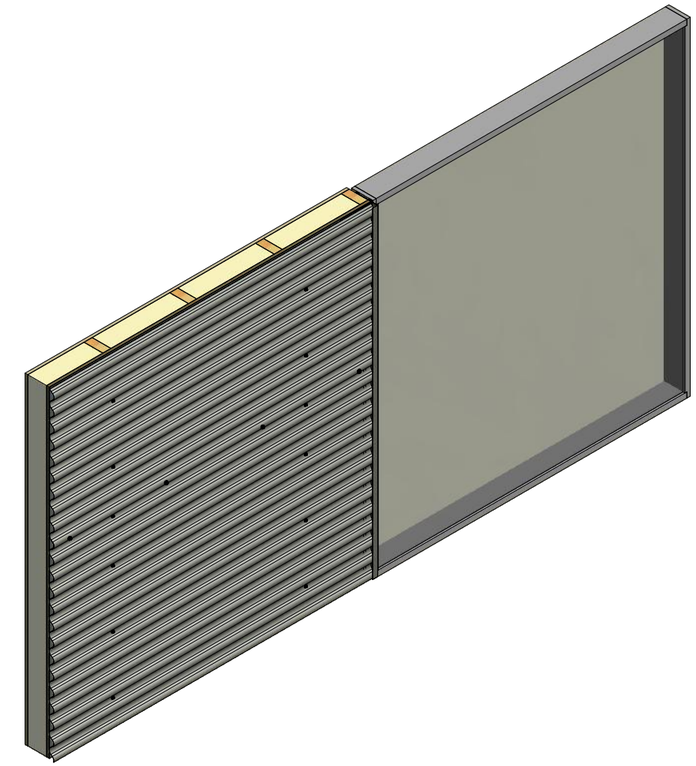

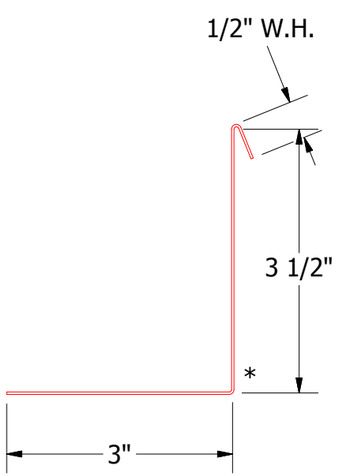

BCA683 - Angle Trim With Return

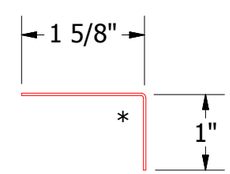

BCA680-Angle Trim

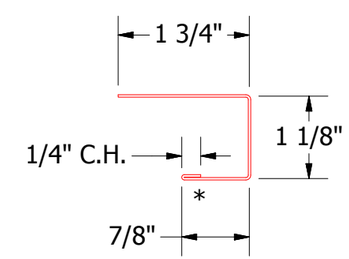

BCA118-J Channel

ATAS INTERNATIONAL, INC
Allentown PA
610-395-8445
Mesa AZ
480-558-7210

REV. NO.	DATE	DESCRIPTION OF REVISION	BY	APP

TITLE Belvedere Corrugated Jamb Detail			
DWG. NO.	DR KRK	DATE 5/8/2015	
	APP DAS	DATE 7/29/16	
MATERIAL	SH. SIZE B	SCALE X:X	