Vertical Panel

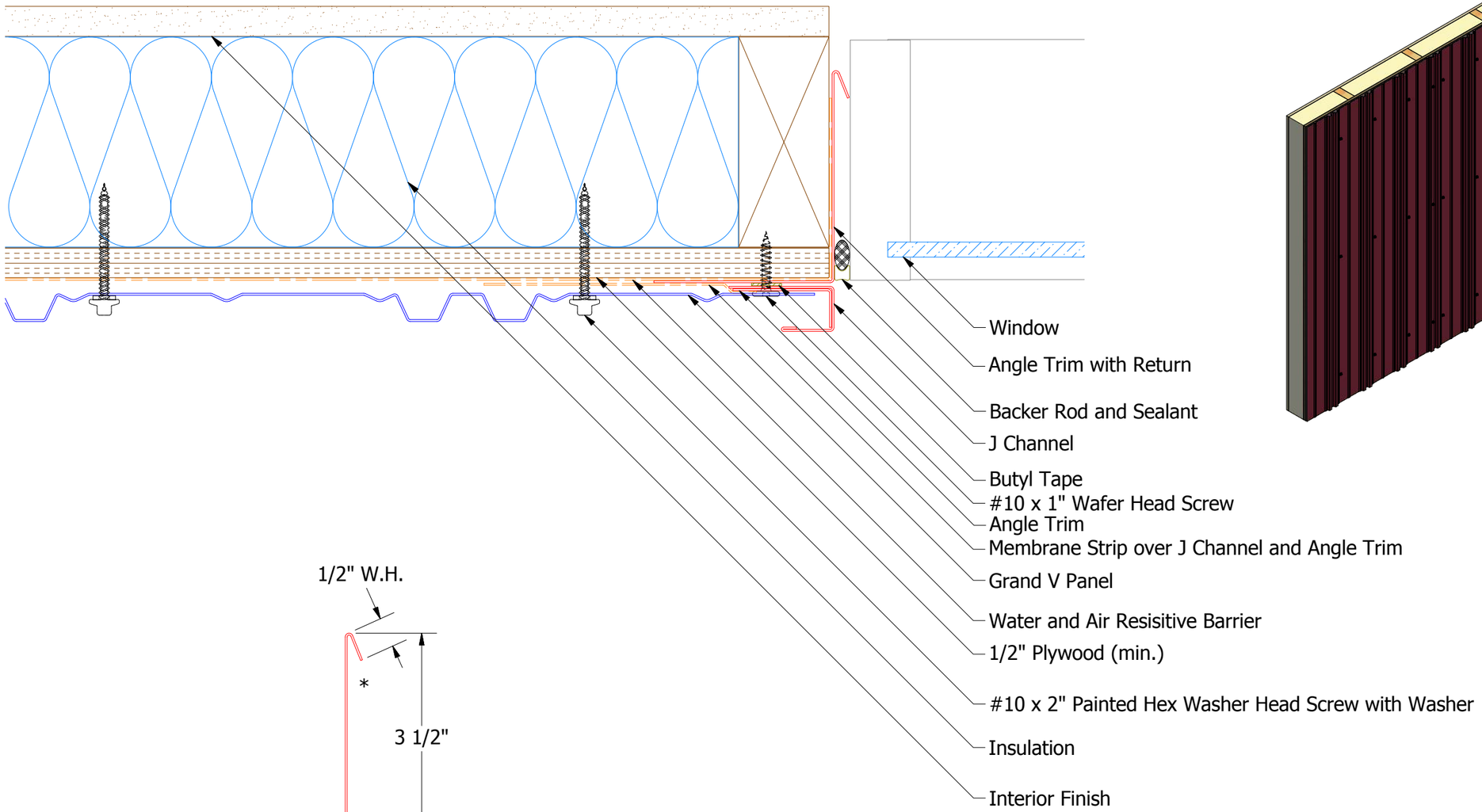

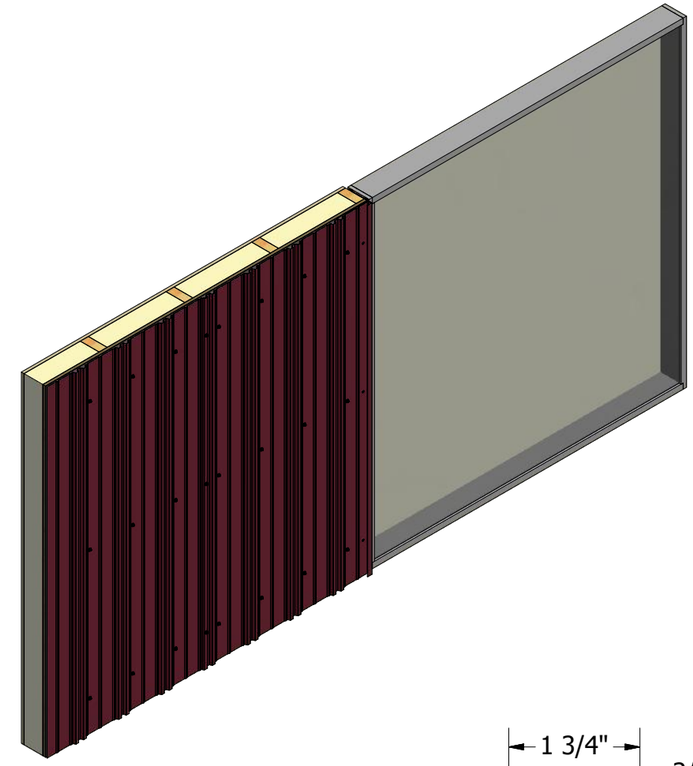

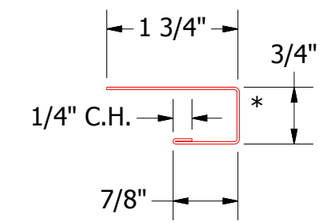

BGA034 - J Channel

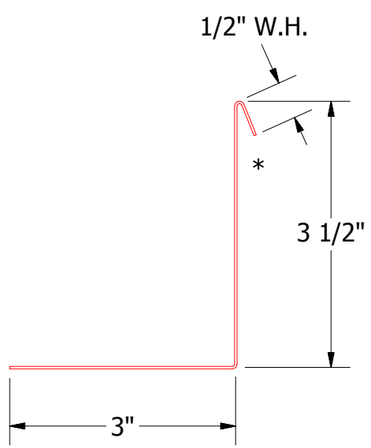

BGA683 - Angle Trim with Return

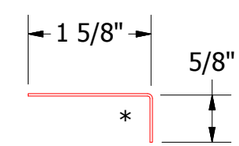

BGA680 - Angle Trim

ATAS INTERNATIONAL, INC
Allentown PA
610-395-8445
Mesa AZ
480-558-7210

REV. NO.	DATE	DESCRIPTION OF REVISION	BY	APP

TITLE	Grand V Jamb Detail		
DWG. NO.		DR DMR	DATE 6/14/2016
MATERIAL		APP DAS	DATE 8/8/16
		SH. SIZE B	SCALE X:X