Horizontal Panel

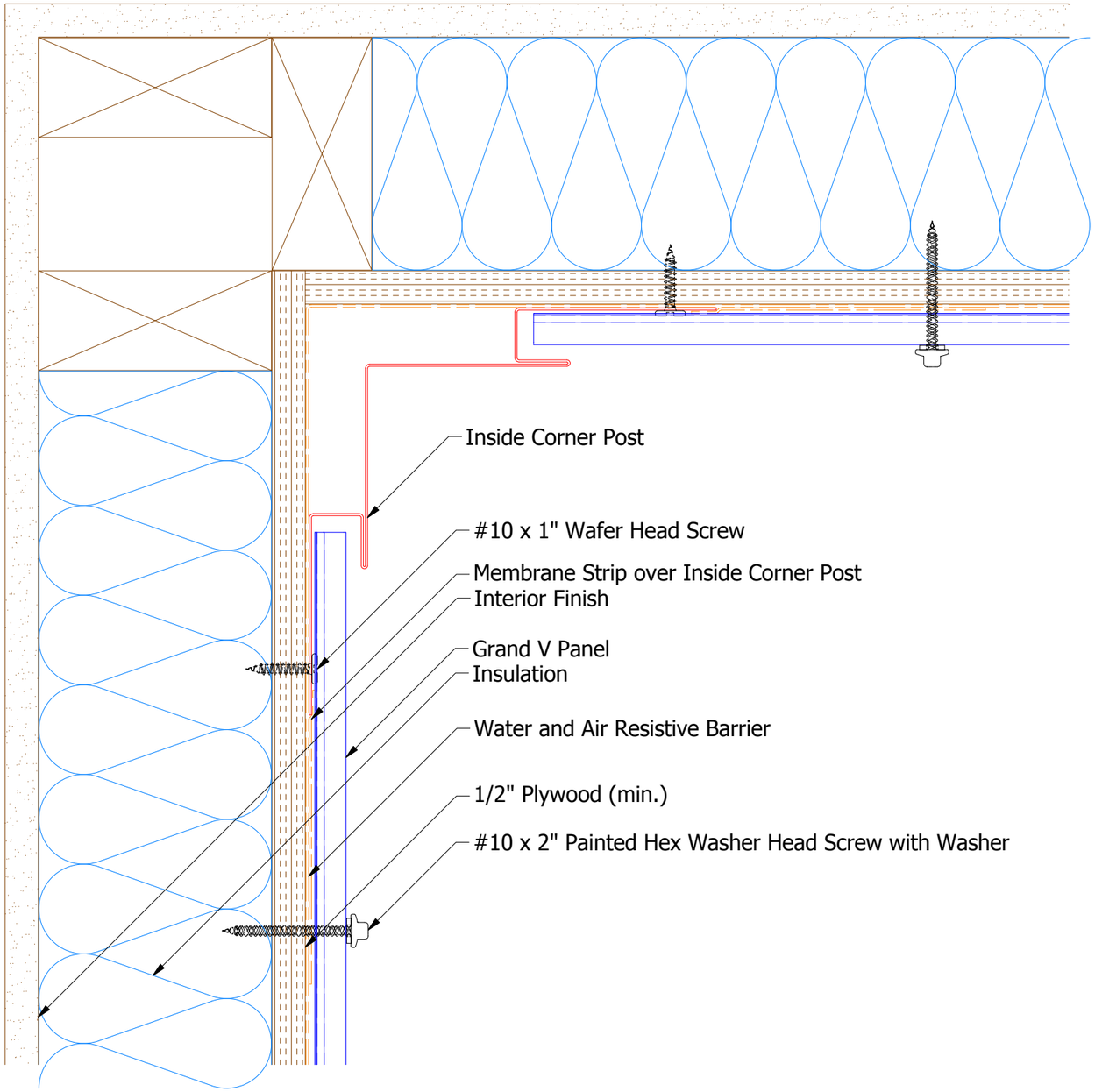

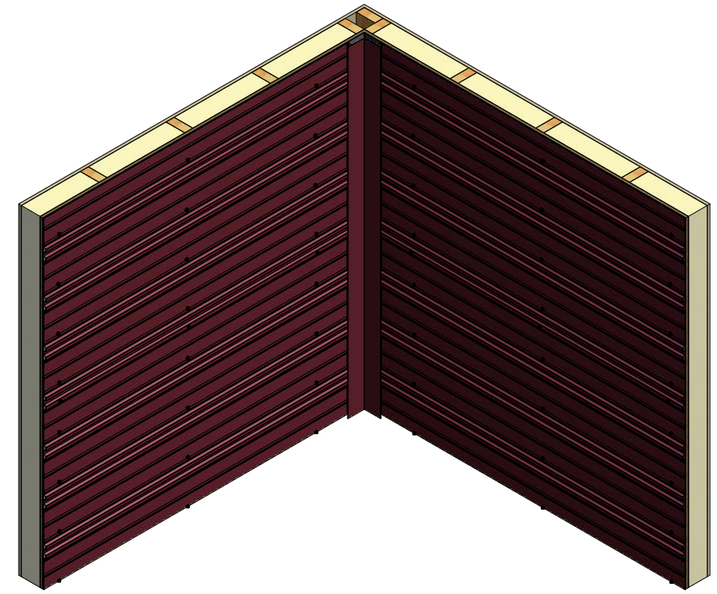

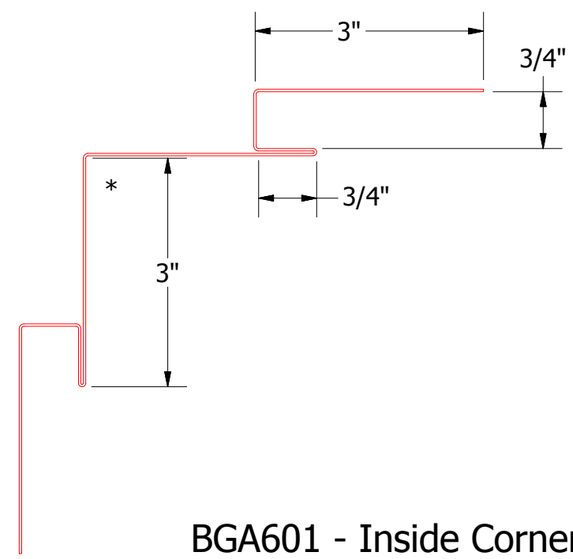

BGA601 - Inside Corner Post

ATAS INTERNATIONAL, INC
Allentown PA
610-395-8445
Mesa AZ
480-558-7210

REV. NO.	DATE	DESCRIPTION OF REVISION	BY	APP

TITLE	Grand V Inside Corner Detail		
DWG. NO.		DR DMR	DATE 6/14/2016
		APP DAS	DATE 8/8/16
MATERIAL		SH. SIZE B	SCALE X:X