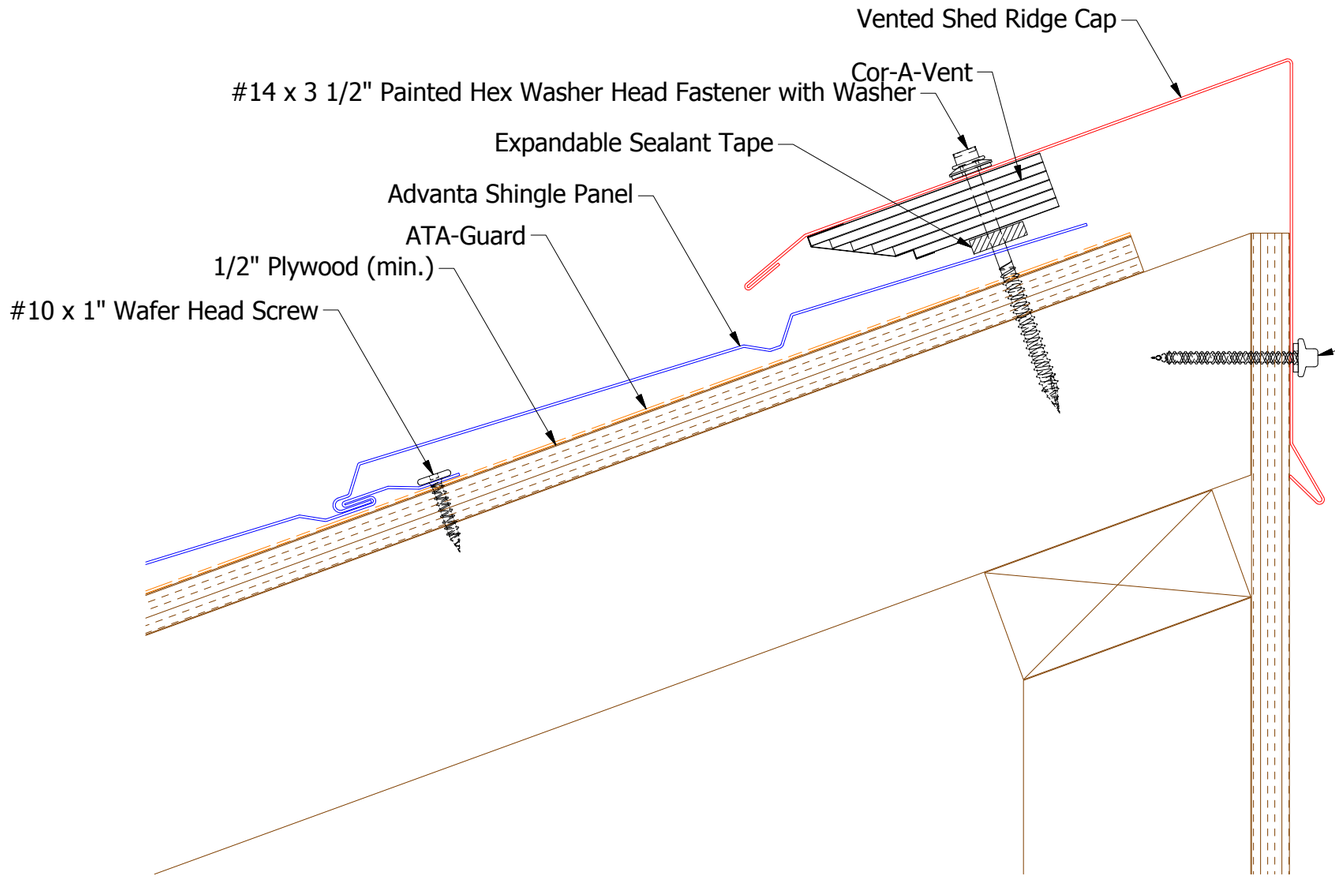

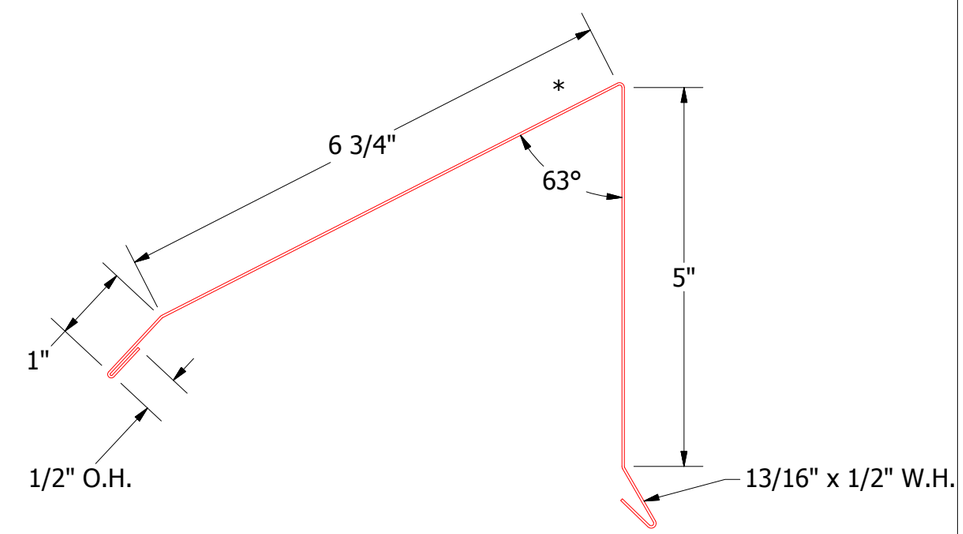

HSA362 - Vented Shed Ridge Cap

Note: * denotes color side.

REV. NO.	DATE	DESCRIPTION OF REVISION	BY	APP

ATAS INTERNATIONAL, INC
Allentown PA
610-395-8445
Mesa AZ
480-558-7210

TITLE Advanta Shingle Vented Shed Ridge Detail			
DWG. NO.	DR KRK	DATE 4/10/2018	
MATERIAL	APP	DATE	
	SH. SIZE B	SCALE X:X	