Horizontal Panel - Alternate

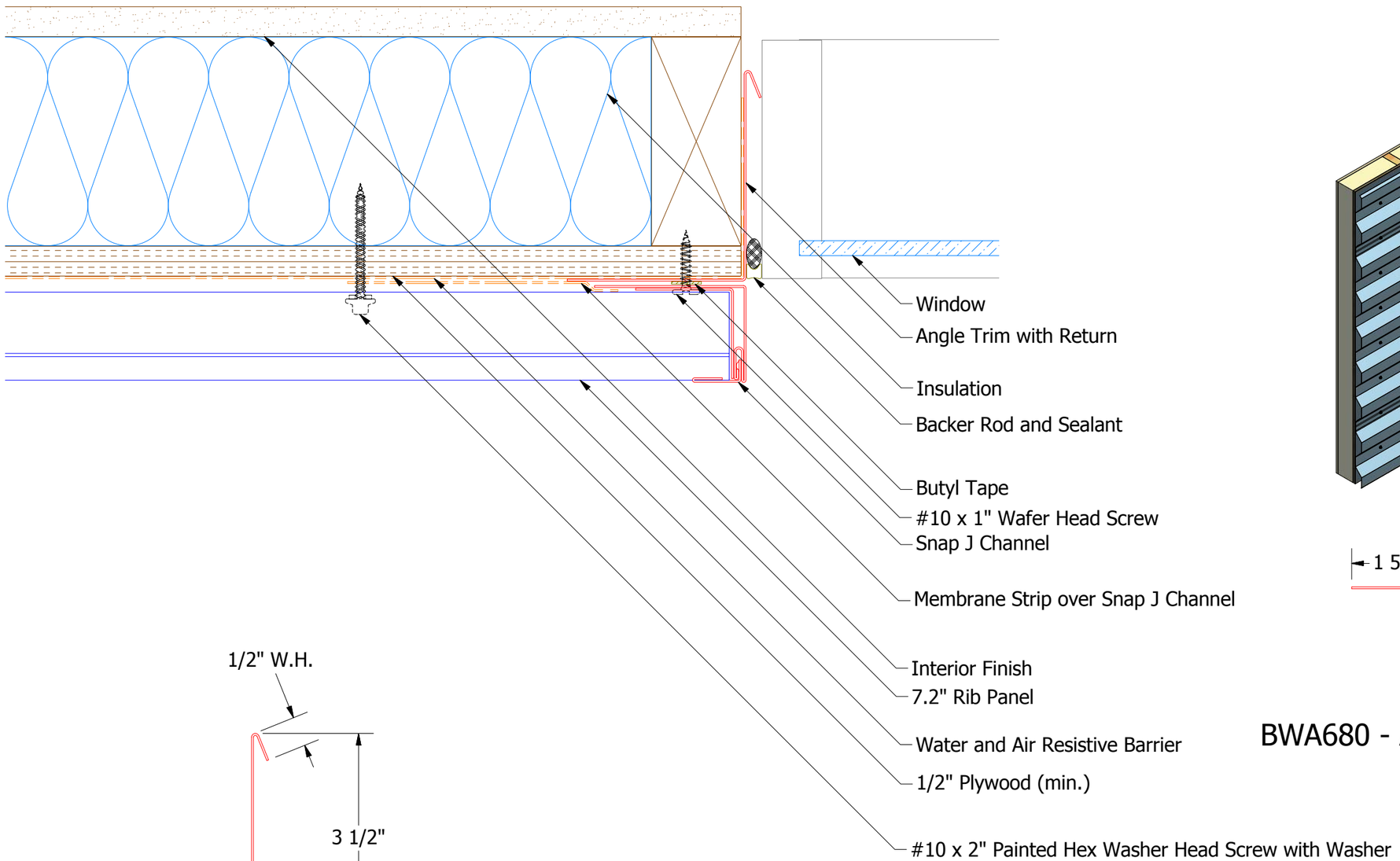

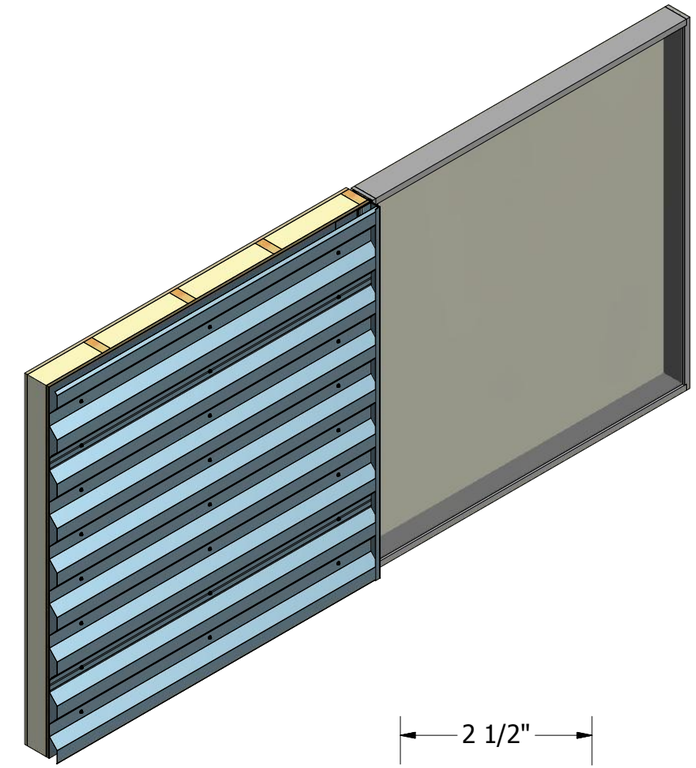

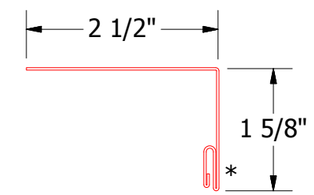

BWA159 - Snap J Base

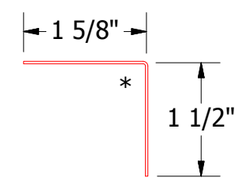

BWA680 - Angle Trim

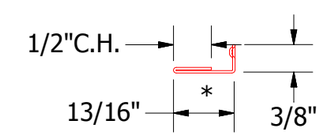

UNS078 - Snap J Cover

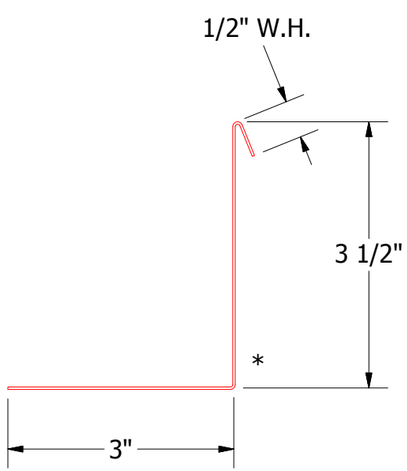

BWA683 - Angle Trim with Return

ATAS INTERNATIONAL, INC
Allentown PA
610-395-8445
Mesa AZ
480-558-7210

REV. NO.	DATE	DESCRIPTION OF REVISION	BY	APP

TITLE	7.2 inch Rib Jamb Alt Detail		
DWG. NO.		DR KRK	DATE 2/1/2016
MATERIAL		APP DAS	DATE 7/20/16
		SH. SIZE B	SCALE X:X