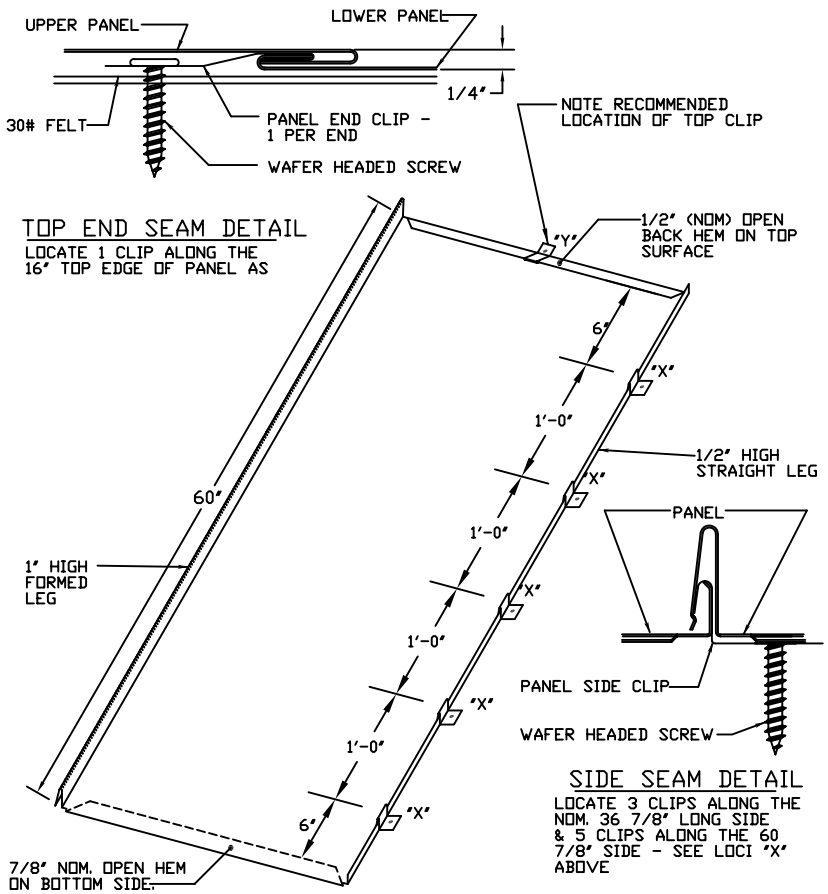

STANDING SEAM SHINGLE PANELS

PANELS ARE 16" (NOM.) WIDE BY EITHER 36 7/8" LONG (36" NOM. COVERAGE) OR 60 7/8" LONG" (60"NOM. COVERAGE).

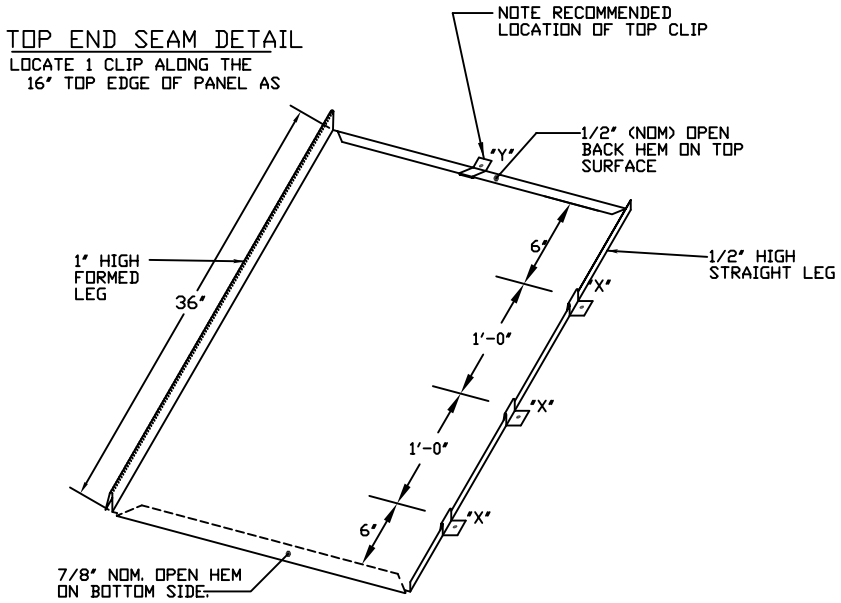

ATAS INTERNATIONAL, INC.
Allentown PA
610-395-8445
Mesa AZ
480-558-7210

TITLE	Standing Seam Profile						
DWG NO. / FILE NO.	Standing Seam Profile					SCALE	3"=1'-0"
DRAWN BY	DAS	DATE	7-24-07	APPR. BY	JEB	DATE	7-24-07
REVISION NO.	XXXX	REVISION DATE	MM/DD/YY	APPR. BY	XXXX	APPR. DATE	MM/DD/YY

Rev. No.	Revision Date	Drawn By	Description of Revision
0	7-24-07	DAS	Standing Seam Profile