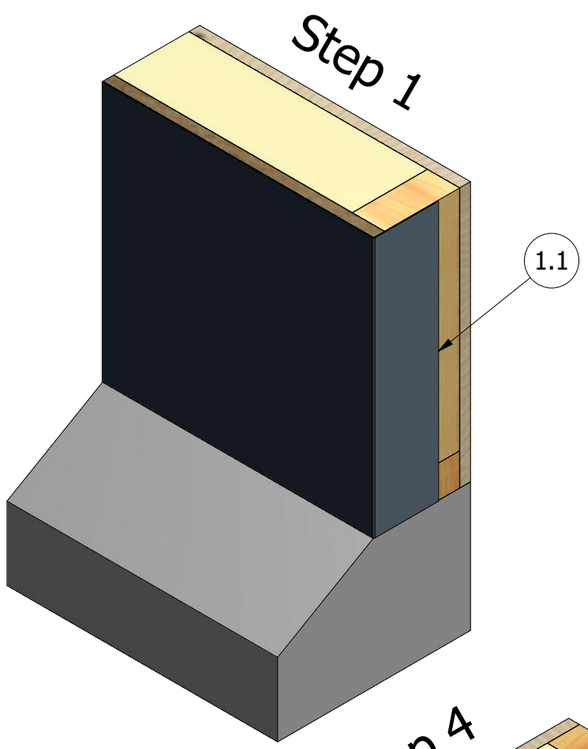

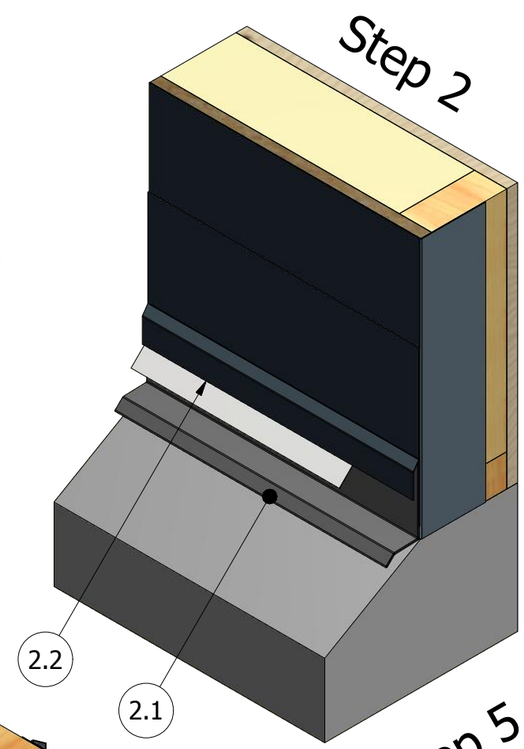

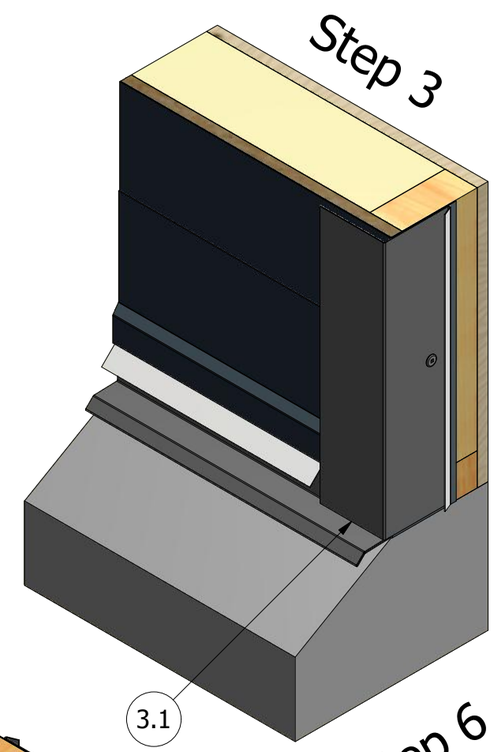

Step 1.1 Run Underlayment on Substrate and return into Window Opening.

Step 2.1 Install Base Trim up to Window Opening. (use other appropriate trim when conditions and wall panels warrant)
Step 2.2 Strip in Base Trim with Membrane.

Step 3.1 Install Jamb Angle Trim down to Base Tim.

Step 4.1 Install J Channel on top of Butyl Tape with Angle Trim for color.
Step 4.2 Strip in J Channel and Angle Trim with Membrane to create a positive flow over trims.

Step 5.1 Install Wall Panels. (use other appropriate trim when conditions and wall panels warrant)

Step 6.1 When Windows are installed use Backer Rod and Appropriate Sealant between Window Frame and Trim.

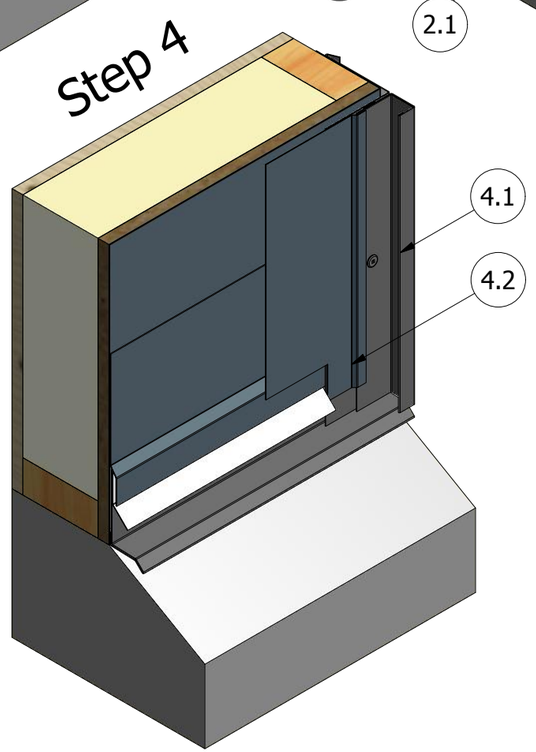

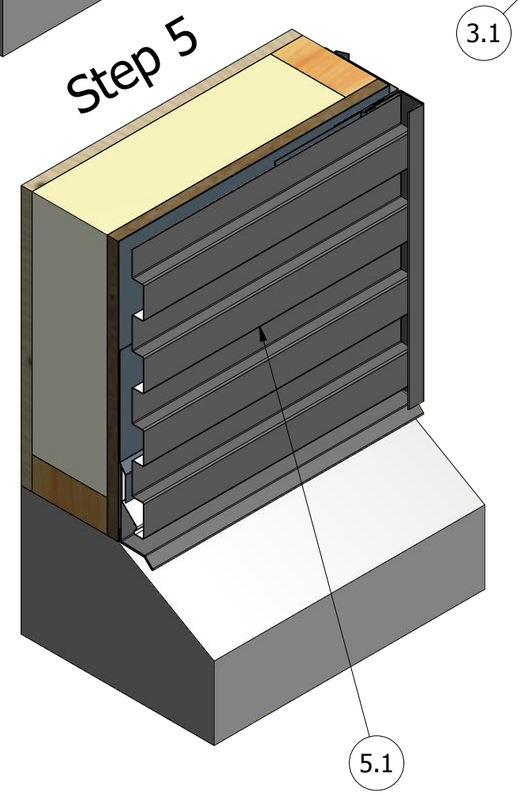

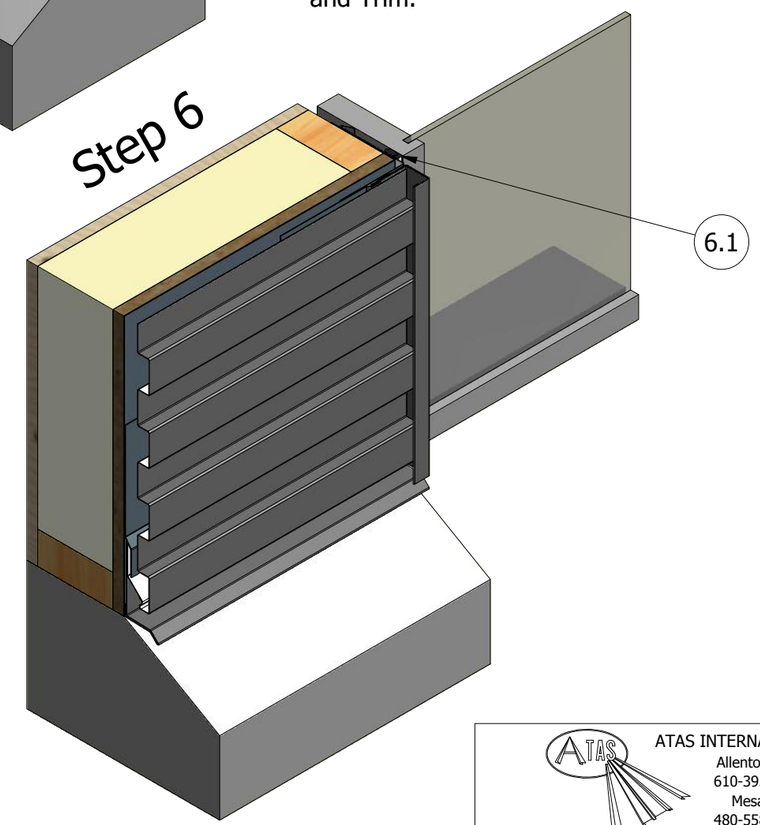

REV. NO.	DATE	DESCRIPTION OF REVISION	BY	APP

ATAS INTERNATIONAL, INC
Allentown PA
610-395-8445
Mesa AZ
480-558-7210

TITLE
Base to Jamb Solid Substrate Detail

DWG. NO.		DR KRK	DATE 4/7/2015
		APP	DATE
MATERIAL		SH. SIZE B	SCALE X:X